Non e permesso consegnare a terzi o riprodurre questo documento, ne utilizzarne il contenuto o renderlo comunque noto a terzi senza autorizzazione esplicita. Ogni infrazione costituira un evidente abuso e comportera il risarcimento dei danni subiti. E'fatta riserva di tutti i diritti derivanti da brevetti o modelli.

Copying of this document and giving it to others and the use or communication of the contents thereof, are forbidden without express authority. Contravention of this restriction will constitute an evident abuse and result in a liability to the payment of damages. All rights are reserved in the event of the grant of patent or registration of a utility model or design. This document is the subject of copyright.

Toute Communication ou reproduction de ce document, toute exploitation ou communication de son contenu sont interdites, sauf autorisation expresse. Tout manquement a cette regle constitue un abus evident et expose son auteur au versement de dommages et interets. Tous droits de propriete industrielle reserves, notamment en matiere de brevets et de modeles.

Weitergabe sowie Vervielfaeltigung dieser Unterlage, Verwertung und Mitteilung ihres Inhalts nicht gestattet, soweit nicht ausdrueckliich zugestanden. Zuwiderhandlungen stellen einen offensichtlichen Missbrauch dar und verpflichten zu Schadenersatz. Alle Rechte fuer den Fall der Patenterteilung oder Gebrauchsmuster-Eintragung vorbehalten.

A	B	C	D	E	F	G	H	I	J	K
for Tube 10x1,0 new Line <CI> Ⓒ	M12x1,5	8	Hex.20	Ø19,7	37	20Nm (24Nm)	(24) Push in length <CI> Ⓒ	1,5	Ø18,3	with O-ring

G : recommended torque without lubrication (max. torque) respect max torque of counter part

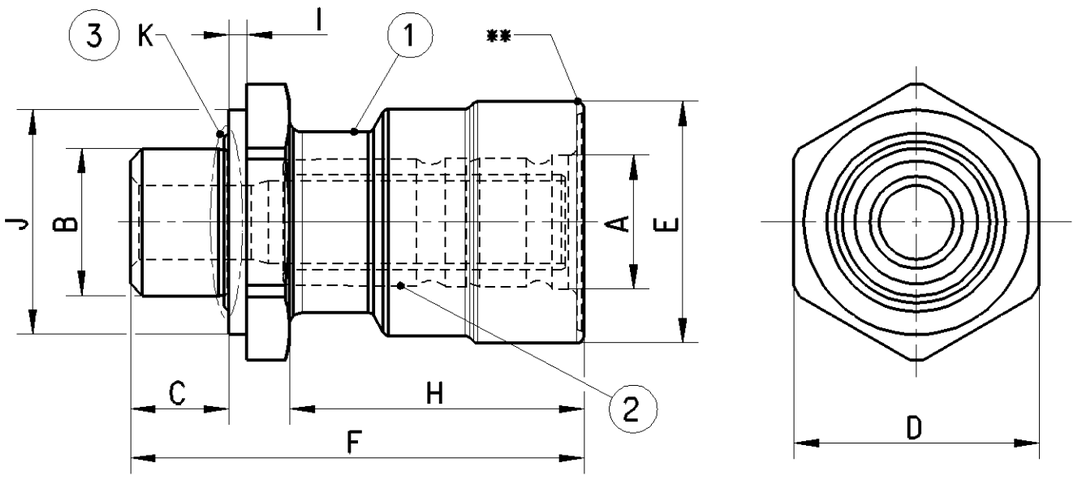

Cleanliness requirement:

Class: K00 according JED-593

Area: for the whole part (Special agreements possible; to be agreed with Product Engineering)

Material:

1. CuZn
2. PA (inner components)
3. EPDM

General Specification : JED-762 ; JED-622 ; JED-220

Engineering related agreements with Supplier have to be mentioned in the "Release of Supplier"

For use in application in compressed air systems in commercial vehicles :

- with Polyamind or Hytrel tubes acc. ISO7628; DIN74324, DIN73378
- with compressed air acc. JED-848
- at working conditions (consider tube spec.) :
  - -40°C ... 60°C
  - max. 12,5 bar

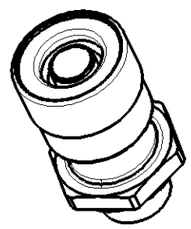

1:1

General Specification: JED-334-1 , Size ISO 14405 LP					
Further Technical Data:					
Doc. Code:			Sheet:	To	
General Tolerances JED-261					
		Range of Nominal Dimensions (± mm)			
Class	1)	≤ 50	> 50 ≤ 180	> 180 ≤ 400	> 400
Fine	X	0.5	1.0	1.5	2.0
Medium		1.0	2.0	3.0	4.0
Coarse		2.0	3.5	5.0	6.5
Tapped Holes acc. -					
1) Tolerance Class Applied Crossmarked					

Copyright WABCO®

Date	Signature
Drawn	
2019-11-28	Baloga
Checked	
2019-12-11	Szczutkowski
Expert	
Szczutkowski	

WABCO

Screw-in Fitting

Mass	Scale	Material No.	Date of first issue: 2013-08-07		
0.034 KG	2:1 1:1	893 800 807 2	Doc.Code 005	Language EN	Sheet 1/1
Size	CAD System				
A 3	CREO	ECN-No. 502571 / Revision 2 x C / Techn. Resp. 5790	Replacement for		

100mm