	A	B	C	D	E	F
TOLERANCE:	±0.3		P5 ±0,1		+0,5	
	20	12x1,5	15,2 (REGULAR)	min.34	19	with O-ring

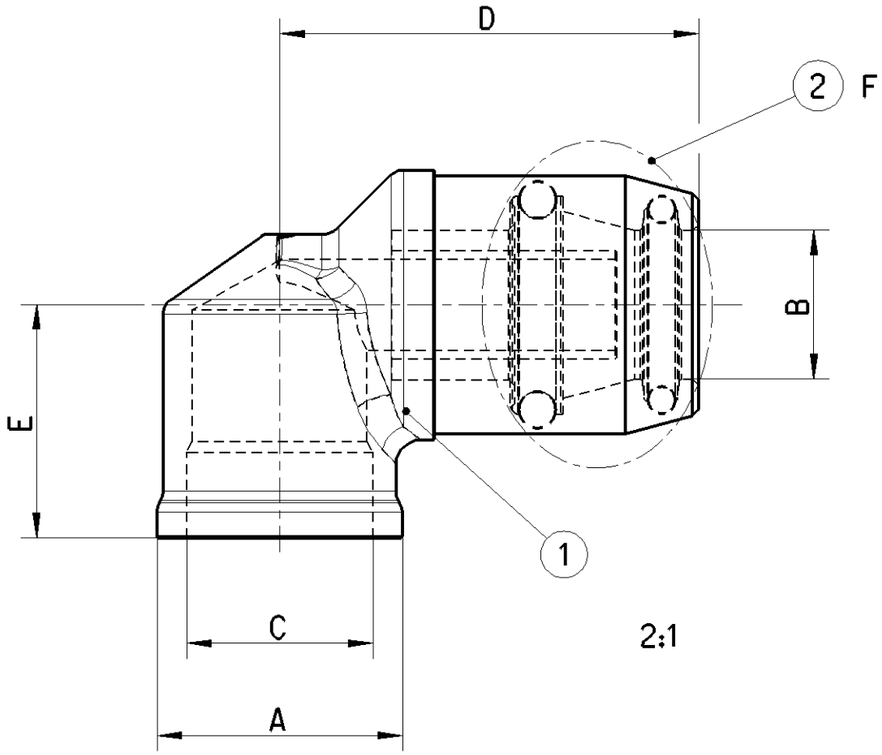

Cleanliness requirement:

No particles >1mm allowed acc. to mandatory standard: JED-334 and JED-593

Area: for the whole part (Special agreements possible; to be agreed with Product Engineering)

Material:

1 CuZn

2 EPDM

General Specification : JED-762 ; JED-622 ; JED-271 ; JED-220

Engineering related agreements with Supplier have to be mentioned in the "Release of Supplier"

For use in application in compressed air systems in commercial vehicles :

- with compressed air acc. JED-848
- at working conditions:
  - -40°C ... 100°C
  - max. 12,5bar

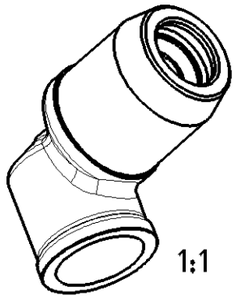

General Specification: ISO 8015, JED-334-1, Size ISO 14405 LP

Further Technical Data:

Doc. Code: Sheet: To

General Tolerances JED-261

Class 1)	Range of nominal dimensions in mm ≤ 50	> 50 ≤ 180	> 180 ≤ 400	> 400	∢
Fine	±0.5	±1	±1.5	±2	±3°
Medium	±1	±2	±3	±4	
Coarse	±2	±3.5	±5	±6.5	

Tapped Holes acc. JED-152

1) Tolerance Class Applied Crossmarked

Copyright WABCO®

WABCO

Date	Signature
Drawn 2021-11-18	Balaga
Checked 2022-02-10	Szczutkowski

Dimensions in mm

Mass	Scale	Material No.	Date of first issue: 2022-02-10		
/ kg	2:1 (1:1)	893 831 182 0	Doc.Code 005	Language EN	Sheet 1/1
Size A 3	CAD System CREO	ECN-No. - / Revision - / Techn. Resp. 5790	Replacement for -		

100mm

Non e permesso consegnare a terzi o riprodurre questo documento, ne utilizzarne il contenuto o renderlo comunque noto a terzi senza autorizzazione esplicita. Ogni infrazione costituira un evidente abuso e comportera il risar cimento dei danni subiti. E'fatta riserva di tutti i diritti derivanti da brevetti o modelli.

Copying of this document and giving it to others and the use or communication of the contents thereof, are forbidden without express authority. Contravention of this restriction will constitute an evident abuse and result in a liability to the payment of damages. All rights are reserved in the event of the grant of patent or registration of a utility model or design. This document is the subject of copyright.

Toute Communication ou reproduction de ce document, toute exploitation ou communication de son contenu sont interdites, sauf autorisation expresse. Tout manquement a cette regle constitue un abus evident et expose son auteur au versement de dommages et interets. Tous droits de propriete industrielle reserves, notamment en matiere de brevets et de modeles.

Weitergabe sowie Vervielfaeltigung dieser Unterlage, Verwertung und Mitteilung ihres Inhalts nicht gestattet, soweit nicht ausdrueckich zugestanden. Zuwiderhandlungen stellen einen offensichtlichen Missbrauch dar und verpflichten zu Schadenersatz. Alle Rechte fuer den Fall der Patenterteilung oder Gebrauchsmuster-Eintragung vorbehalten.

drw: 893831182_005 / Version: -.2 / state: Under Review / mm: 893831182_A01