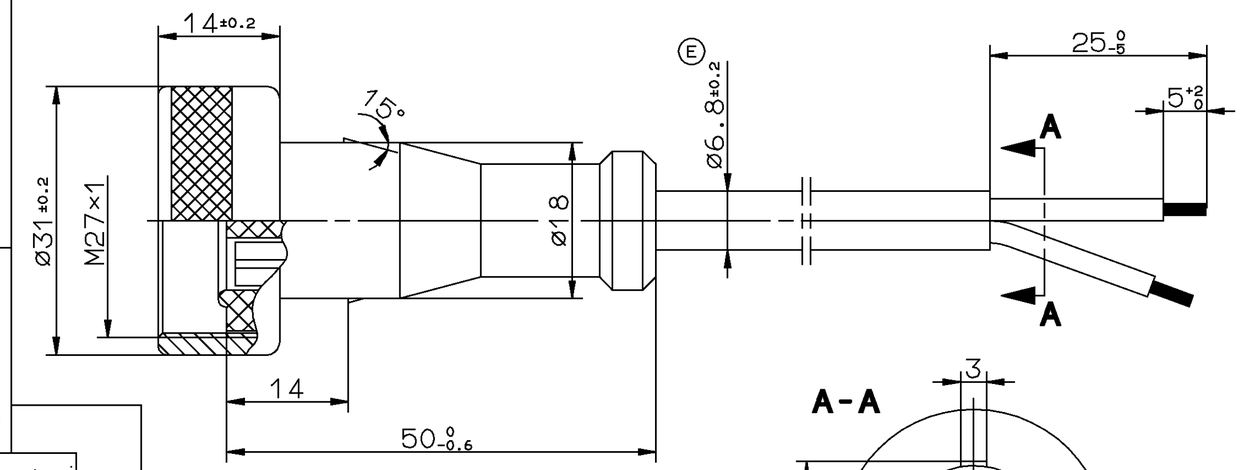

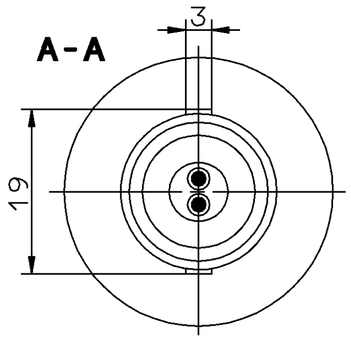

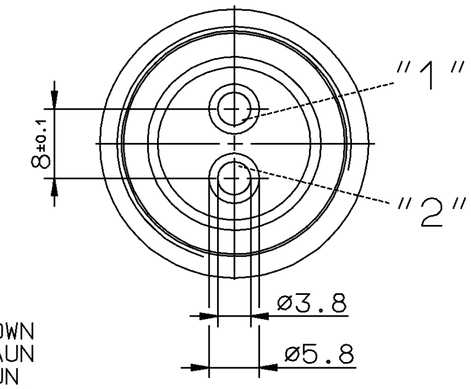

WABCO-NR.	L [mm]
894 601 021 2	5000±50
894 601 022 2	10000±50
894 601 025 2	15000±75

"1" BROWN / BRAUN / BRUN / BRUNO

"2" BLUE / BLAU / BLEU / BLU

1 : 1

PART NO.
TEILE-NR. ****
NO. DE PIECE
CODICE

WEEK AND YEAR OF MANUFACTURE
FERTIGUNGSWOCHE UND JAHR ****
SEMAINE ET ANNEE DE FABRICATION
SETTIMANA E ANNO DI FABBRICAZIONE

WABCO-16-JED-369 ****

PRI-NR.****

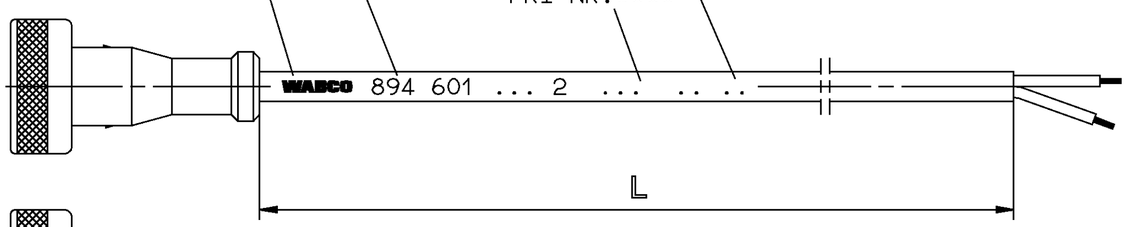

LENGTH
LAENGE
LONGEUR
LUNGHEZZA
} L [m] ****

TWO CORE CABLE
LEITUNG ZWEIADRIG
CABLE A DEUX CONDUCTEURS
CAVO A DUE CONDUTTORI
} PUR Ⓔ 2×1.5mm²

STRAIN RELIEF CABLE
ZUGENTLASTUNG KABEL
ARRET DE CABLE
SCARICO DI TRAZIONE DEL CAVO
} MAX. 200 N ϑ=20°C

THERMAL RANGE OF APPLICATION
THERMISCHER ANWENDUNGSBEREICH
GAMME D'APPLICATION THERMIQUE
CAMPO DI APPLICAZIONE TERMICA
} -40°C...+80°C

**** ABRASION RESISTANT PRINT
ABRIEBFESTER AUFDRUCK
IMPRESSION RESISTANT A L'ABRASION
IMPRONTA RESISTENTE ALL'ABRASIONE
} RAL 9001

RESISTANT TO
BESTAENDIG GEGEN
RESISTANT A
RESISTENTE A
} AIR, WATER, MINERAL OIL, PETROL, DIESELOIL, SALTSPRAY
LUFT, WASSER, MINERALOEL, BENZIN, DIESELOEL, SALZSPRUEHNEBEL
AIR, EAU, HUILE MINERALE, ESSENCE, GASOIL, BROUILLARD SALIN
ARIA, AQUA, OLIO, MINERALE, BENZINA, GASOLIO, NEBBIA SALINA

TYPE OF PROTECTION (IN CONNECTION WITH PLUG)
SCHUTZART (IN VERBINDUNG MIT STECKER)
MODE DE PROTECTION (DANS CONNECTION AVEC FICHE)
TIPO DI PROTEZIONE (IN RELAZIONE CON SPINA)
} IP 68
EN 60529/IEC 529

FOR FURTHER TECHNICAL DATA SEE PRODUCT SPECIFICATION
WEITERE TECHNISCHE DATEN SIEHE PRODUKT SPEZIFIKATION
POUR AUTRES DONNEES TECHNIQUES VOIR PRODUCT SPECIFICATION
PER ULTERIORI DATI TECNICI VEDERE SPECIFICA DI PRODOTTO
} 894 601 021 2

***** DIN 16901-150

GENERAL SPECIFICATION:	JED-334	*****
FURTHER TECHNICAL DATA:		
DOC. CODE:	SHEET:	TO

GENERAL TOLERANCES

CLASS 1)	RANGE OF NOMINAL DIMENSIONS (± mm) ≤50	>50 ≤180	>180 ≤400	>400	∢
FINE	0,5	1,0	1,5	2,0	± 3°
MEDIUM	1,0	2,0	3,0	4,0	
COARSE	2,0	3,5	5,0	6,5	

TAPPED HOLES ACC. ISO 4039 / JED-152

1) TOLERANCE CLASS APPLIED CROSSMARKED

DCN-NO.	REV.	DATE
054556	2× E	94-08-08
049388	1× D	92-07-30
045650	1× C	90-11-12
045647	B	90-10-10

100mm

CADAM-DRAWING COPYRIGHT

	DATE	SIGNATURE
DRAWN:	89-08-03	HARNISCHM
CHECKED:	89-08-03	HOEFLER
STANDARDIZATION:	89-08-07	PANTZER

WABCO

CABLE WITH SOCKET
KABEL MIT GERAETESTECKDOSE
CABLE AVEC PRISE DE COURANT
CAVO CON PRESA DI CORRENTE

MASS	SCALE	PRODUCT IDENTIFICATION NO.	DOC. CODE	SHEET
/ KG	2:1 (1:1)	894 601 023 2	653	1/1
SIZE A 2	T.R.I. 141		SHAPE CODE	REPLACEMENT FOR 894 601 023 2/87-10-07

EXPERT CODE 7 6 0

PRODUCT TYPE 1 2

TOUTE COMMUNICATION OU REPRODUCTION DE CE DOCUMENT, TOUTE EXPLOITATION OU COMMUNICATION DE SON CONTENU NON E PERMESSO CONSEGNARE A TERZI O RIPRODURRE QUESTO DOCUMENTO, NE UTILIZZARNE IL CONTENUTO O RENDERLO ACCESSIBILE A TERZI SONT INTERDITES SAUF AUTORISATION EXPRESSE. LES CONTRAVENTIONS OBLIGENT A DES DOMMAGES ET INTERETS. TOUS DROITS DE PROPRIETE INDUSTRIELLE RESERVES, NOTAMMENT EN MATIERE DE BREVETS ET DE MODELES.
MEITERGABE SOWIE VERVIELFAELTIGUNG DIESER UNTERLAGE, VERWENDUNG UND MITTEILUNG IHRES INHALTS NICHT GESTATTET SOWEIT NICHT AUSDRUECKLICH ZugESTANDEN. ZUWIDERHANDLungen verpflichten zu Schadenersatz. ALLE RECHTE FUER DEN FALL DER PATENTERTEILUNG ODER GEBRAUCHSMUSTER-EINTRAGUNG VORBEHALTEN.
COPYING OF THIS DOCUMENT, GIVING IT TO OTHERS AND THE USE OR COMMUNICATION OF THE CONTENTS THEREOF ARE FORBIDDEN WITHOUT EXPRESS AUTHORITY. OFFENDERS ARE LIABLE TO DAMAGES. ALL RIGHTS ARE RESERVED IN THE EVENT OF THE GRANT OF A UTILITY MODEL OR DESIGN.THIS DOCUMENT IS THE SUBJECT OF COPYRIGHT.

1009/012/2/04.93
605/653