RA DAK/CAD UG	Symb.	Rute/ Sgr.	Forandring/Revision	Em.nr./ECO.no.	Dato/Date/Sign.	Gkj./App.
	C		Release tool 10,15mm have got production status	3201743	2009-11-09/EvMo	GeLi

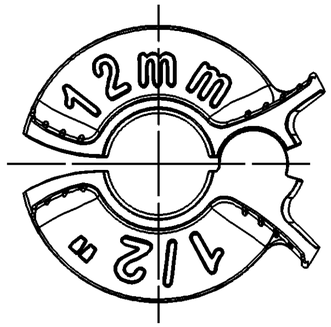

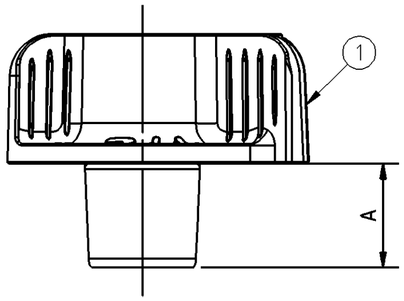

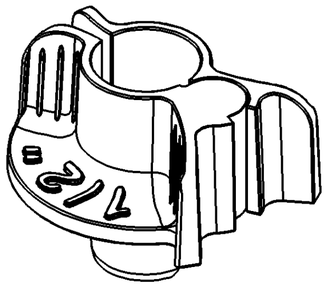

	WABCO PART NUMBER	Raufoss code	Tube diameter	A	Weight [g]
		Tolerance		C ± 0,1	
	8997000174	96606010	6 mm 1/4"	8,7	4,5
	8997000014	96608010	8 mm	9,5	5.0
C	8997000074	96610010	10 mm	10,65	5,4
	8997000024	96612710	12 mm 1/2"	12	5,8
C	8997000084	96615010	15 mm	14	6,5
	8997000034	96616010	16 mm 5/8"	14	6.7

Cleanliness requirement:

Class: K00 according JED-593

Area: for the whole part (Special agreements possible; to be agreed with Product Engineering)

No	Part	Material
1	BODY	POM

Raufoss ABC couplings can be used with polyamide (PA 6.10, PA 10.10, PA 10.12, PA 11, PA 12) or Hytrel tubing to one of the following standards:
- ISO 7628
- DIN 74324
- DIN 73378
- SAE J844

Peak-temperature up to +130 °C (pressure less, for a period of approximately 2 hours.)

Please take into consideration the max allowed tube operation pressure.

Raufoss ABC couplings from Kongsberg Automotive is approved and certified by: TÜV Nord

For any further specific requirements, applications of our product or support for technical solutions, please ask for individual consultation from Kongsberg Automotive, our subsidiary Kongsberg Raufoss Distribution SAS.

Suitable for use in air brake systems for commercial vehicles

General Specification : JED-762 ; JED-622 ; JED-271 ; JED-220

Engineering related agreements with Supplier have to be mentioned in the "Release of Supplier"

Stk.nr./ Pos.no.	Gjenstand/Object/Dim.	Ant./No. pr.sett	Matr.	Dim./Vekt av emne/ Material weight	Norm nr./no.	Anmerkning/Note

Tgn./Drw. EvMo	2009-06-09	Proj.	Gen. ruhet/ roughness	Gen. toler.	Målestokk/ Scale	Ref. tegn./Ref. drawing
Ktrl./Ctrl. AGM	2009-06-09					
Kfr./Cfr.		Erstatning/Replacement for: 001-1401-B		Erstattet av/Replaced by:		
Gkj./App. GeLi	2009-06-09					

Retten til videregivelse av denne tegning/beskrivelse tilhører oss. Tegningen må ikke kopieres, utlånes eller forelegges uvedkommende.

The right to pass this drawing / description belongs to us. The drawing must not be copied, distributed or submitted to persons not concerned.

RAUFOSS ABC

Standard Release Tool
Design record

Raufoss

001-1401-C

Arkiv nr./File no. Sign.

General Specification: JED-334-0 , Size ISO 14405-1 E					
Further Technical Data: 893 000 001 0					
Doc. Code: 035		Sheet: To			
General Tolerances JED-261					
		Range of Nominal Dimensions (± mm)			
Class 1)		≤ 50	> 50 ≤ 180	> 180 ≤ 400	> 400
Fine	X	0.5	1.0	1.5	2.0
Medium		1.0	2.0	3.0	4.0
Coarse		2.0	3.5	5.0	6.5
Tapped Holes acc.					
1) Tolerance Class Applied Crossmarked					

Copyright WABCO®

Date	Signature
Drawn 2013-08-28	Saravanan
Checked 2013-09-02	Kaufmann
Expert	Kaufmann

WABCO

Tool

Mass	Scale	Material No.	Date of first issue:		
- KG	-	899 700 026 4	Doc.Code 053	Language EN	Sheet 1/1
Size A 2	CAD System Pro/E	ECN-No. - -	Revision - -	Techn. Resp. 5790	Replacement for -

100mm

Ikke gjengi, benytte eller meddele innholdet i dette dokument uten vår skriftlige tillatelse er ikke tillatt. Overtredelse medfører erstatningsansvar. Alle rettigheter forbehold i henhold til åndsverkloven.

Non è permesso consegnare a terzi o riprodurre questo documento, ne utilizzarne il contenuto o renderlo comunque noto a terzi senza autorizzazione espressa. Ogni infrazione costituisce un illecito civile ed penale ed comporterà il risarcimento dei danni subiti.

El otorgamiento a terceros, la copia, el uso o la divulgación del presente documento, así como el ejercicio de su contenido, quedan prohibidos sin autorización expresa. Cualquier infracción será considerada como un delito civil y penal y conlleva la indemnización de los daños causados.

Toute Communication ou reproduction de ce document, toute exploitation ou communication de son contenu sont interdites, sauf autorisation expresse. Tout manquement à cette règle constitue un délit civil et expose son auteur au versement de dommages et intérêts. Tous droits de propriété industrielle réservés, notamment en matière de brevets et de modèles.

Weitergabe sowie Vervielfältigung dieser Unterlage, Verwertung und Mitteilung ihres Inhalts nicht gestattet, soweit nicht ausdrücklich zugestanden. Zuwiderhandlungen stellen einen zivilrechtlichen Missbrauch dar und verpflichten zu Schadensersatz. Alle Rechte für den Fall der Patenterteilung oder Gebrauchsmuster-Eintragung vorbehalten.