FIRST ANGLE PROJECTION

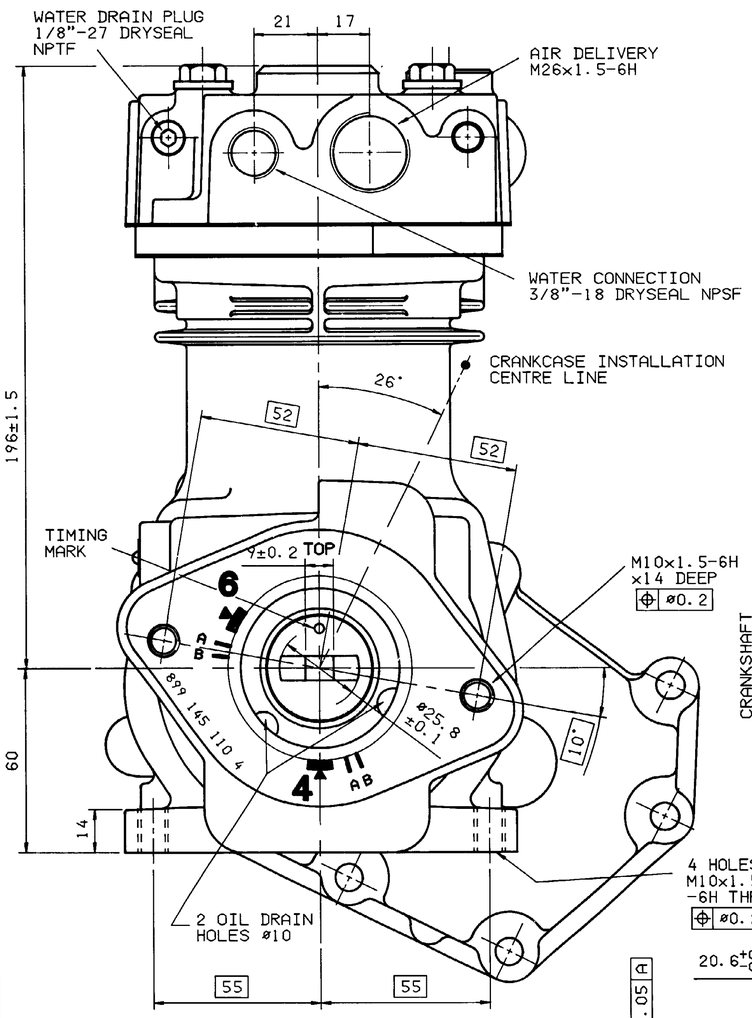

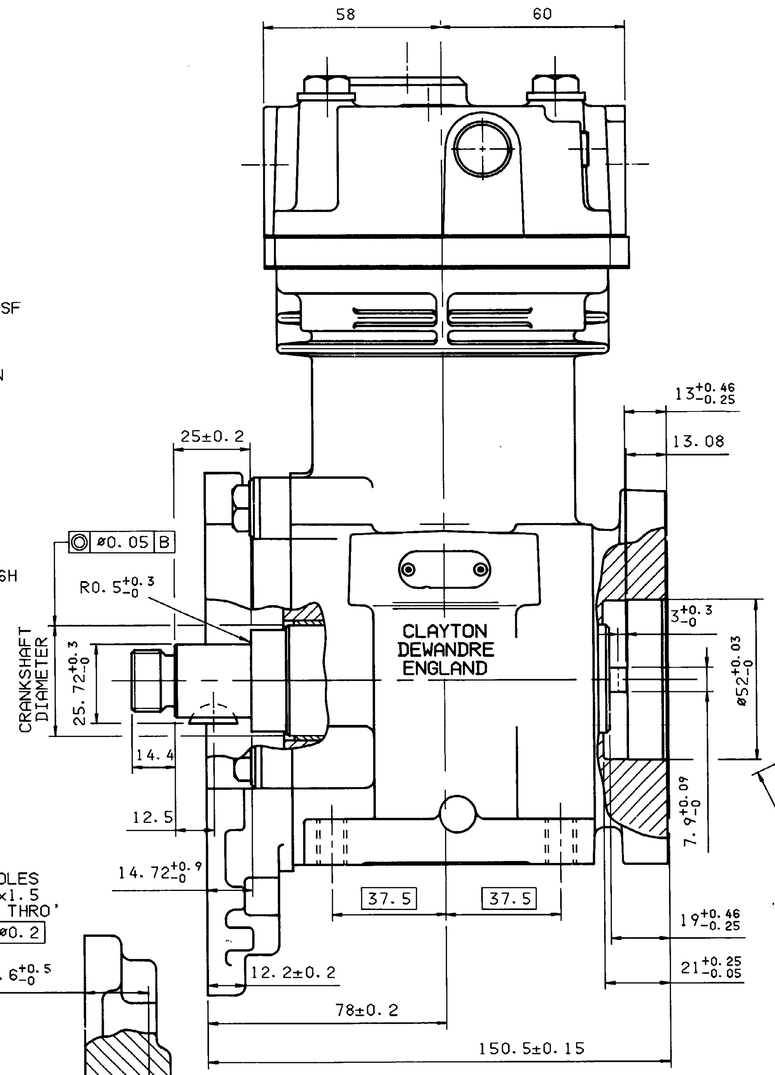

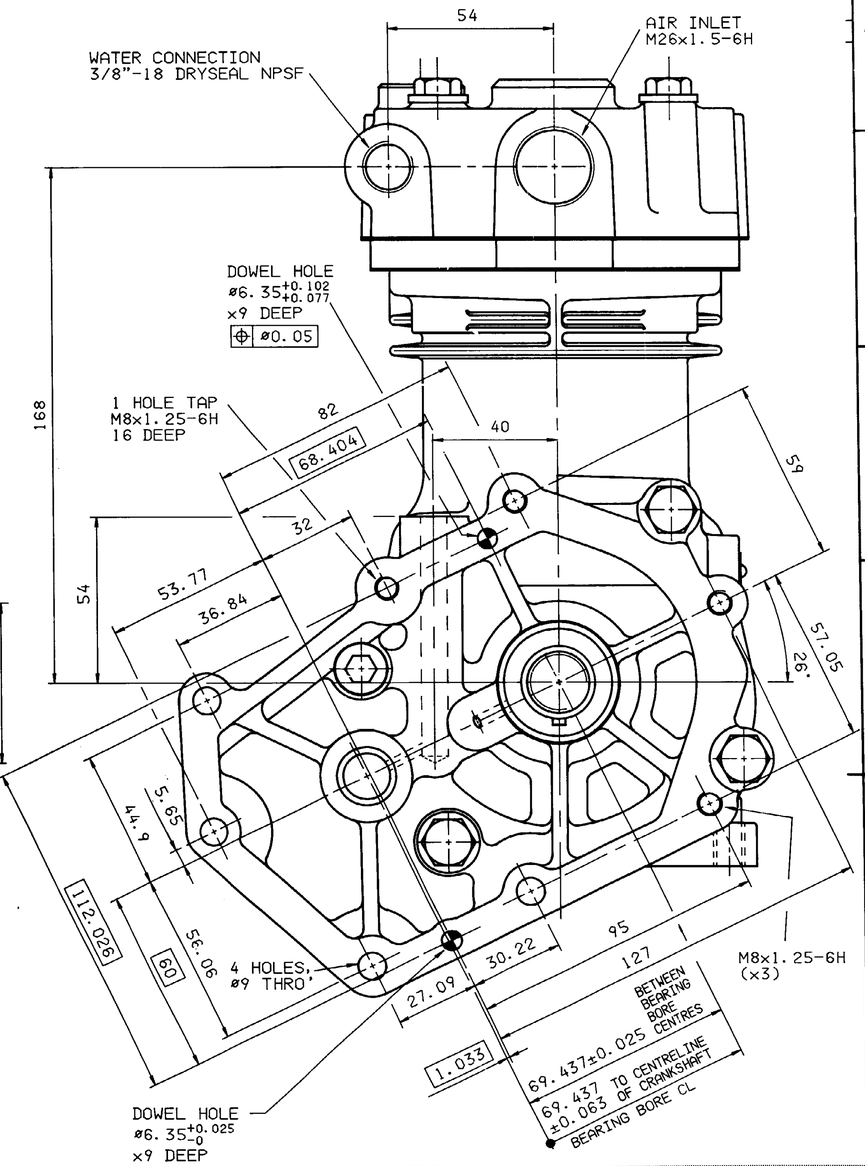

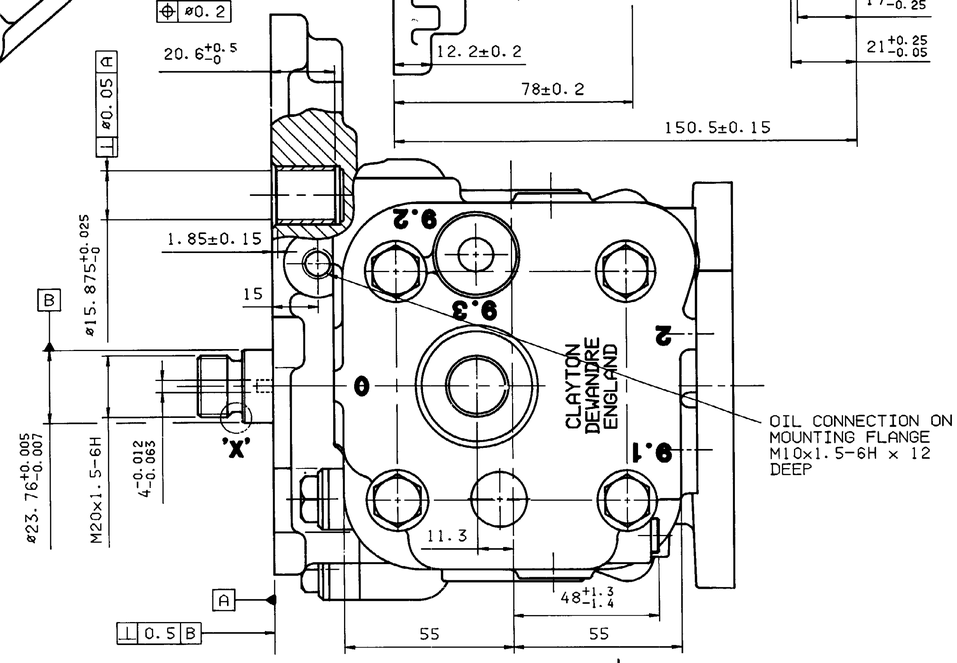

DETAILS OF UNDERCUT AT 'X'
(SCALE 5:1)

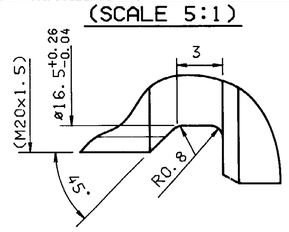

DIMENSIONS IN MILLIMETRES

DRAWING PRODUCED ON CADAM
MANUAL CHANGES PROHIBITED

FURTHER TECHNICAL DATA SEE			
IDENTIFICATION No.:			
CODE FOR DOCUMENT:	SHEET:	TO	

GENERAL TOLERANCES JED 261

CLASS	RANGE OF NOMINAL DIMENSIONS (± mm) ≤ 50	> 50 ≤ 180	> 180 ≤ 400	> 400	∡
I 1)	0,5	1	1,5	2	±3°
II	1	2	3	4	
III	2	3,5	5	6,5	

1) TOLERANCE CLASS APPLIED CROSSMARKED

DCN-No.	REV.	DATE
4655	B	5/5/93
4246	A	17/8/92

COPYRIGHT

	DATE	SIGNATURE
DRAWN	4/6/92	R BORRETT
CHECKED	17/8/92	D T UNSWORTH
STANDARDIZATION	27/8/92	R BORRETT

MASS kg | SCALE 1:1 (5:1) | SIZE A1 | T.R.I. 300

WABCO

159cc SINGLE CYLINDER
WATER COOLED
COMPRESSOR

PRODUCT IDENTIFICATION No. 911 145 005 0

CODE FOR DOCUMENT 605 | SHEET 1/2

CODE F PROD GROUP 500 | CODE FOR SHAPE | REPLACEMENT FOR 884 701 609 0

100mm

Non è permesso consegnare a terzi o riprodurre questo documento, né utilizzare il contenuto o rivelarne ad altri il contenuto, salvo nella misura in cui sia stato concesso per iscritto. Ogni violazione comporta il risarcimento dei danni subiti. È fatta riserva di tutti i diritti derivanti da brevetti o modelli.

Copying of this document and giving it to others and the use or communication of the contents thereof are not permitted without written authorisation. Infringement of a utility model or design is liable to the payment of damages. All rights are reserved in the event of the grant of a patent or the registration of a utility model or design.

Toute communication ou reproduction de ce document, toute exploitation ou communication de son contenu sont interdites, sauf autorisation expresse. Tout manquement à cette règle rend son auteur responsable du paiement de dommages-intérêts. Tous droits réservés, notamment en matière de brevets et de modèles.

Weitergabe sowie Vervielfältigung dieser Unterlage, Verwertung und Mitteilung ihres Inhalts sind ohne ausdrückliche Genehmigung untersagt. Zuwiderhandlungen verpflichten zu Schadensersatz. Alle Rechte für den Fall der Patenterteilung oder Gebrauchsmustereintragung vorbehalten.

This drawing is the subject of copyright.

U.D.O. 5233/91 (22/79)