TECHNICAL DATA
TECHNISCHE DATEN
CARACTERISTIQUES TECHNIQUES
CARATTERISTICHE TECHNICHE

BORE: BOHRUNG: ALESAGE: ALESAGGIO:	Ø85 mm
STROCKE: HUB: COURSE: CORSA:	56 mm
SWEPT VOLUME: HUBRAUM: CYLINDREE: CYLINDRATA:	318 ccm
MAXIMUM INTAKE PRESSURE: MAXIMALER EINLASS-DRUCK: PRESSION MAXIMUM DE PREISE: PRESSIONE MASSIMA DELLA PRESA:	p=3 bar
MAX. WORKING SPEED: MAX. BETRIEBSDREHZAHL: VITESSE D'UTILISATION MAXI: VELOCITA DI ESERCIZIO MAX.:	n_{max}= 3000 min^{-1}
OVERSPEED (TEMPORARY MAX. 4 SEC.) : UEBERDREHZAHL (KURZZEITIG MAX. 4 SEC.) : SURVITESSE (DE COURTE DUREE MAXI. 4 SEC.) : SOVRAVELOCITA (BREVE TEMPO SOLO MAX. 4 SEC.) :	n_{ue}=1.3*n_{max}
MAX. WORKING PRESSURE: MAX. BETRIEBSDRUCK : PRESSION D'UTILISATION MAXI. : PRESSIONE DI ESERCITIO MAX. :	p=10 bar **
MAX PRESSURE (TEMPORARILY <= 4 SEC.) : HOECHSTDRUCK (KURZZEITIG <= 4 SEC.) : PRESSION MAXI. (DE COURTE DUREE <= 4 SEC.) : PRESSIONE MASSIMA (BREVE TEMPO SOLO <= 4 SEC.) :	p=14 bar **
END PLAY OF CRANKSHAFT: AXIALSPIEL DER KURBELWELLE: JEU AXIAL DU VILEBRQUIN: GIOCO ASSIALE DELL 'ALBERO A GOMITO:	0.005 - 0.20mm

LUBRICATION: LUBRICATION SUPPLIED FROM ENGINE
SCHMIERART: UMLAUFSCHMIERUNG MIT DRUCKOELANSCHLUSS
GRAISSAGE: GRAISSAGE PAR CIRCULATION ALIMENTATION PAR LE MOTEUR
LUBRIFICATIONE: LUBRIFICATIONE A CIRCOLATIONE ALIMENTATIONE DAL MOTORE

MAX. PERMISSIBLE TILT DURING CONTINUOUS WORKING:
MAX. ZULAESSIGE NEIGUNG IM DAUERBETRIEB:
INCLINAISION MAX. ADMISE EN SERVICE CONTINU:
MASSIMA INCLINAZIONE AMMESSA IN CASO DI SERVIZIO CONTINUO:

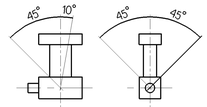

** MEASURING POINT : DISCHARGE PORT
MESSPUNKT : DRUCKANSCHLUSS
POINT DE MESURE : REFOULEMENT
PUNTO DI MESURA : COMPRESSIONE

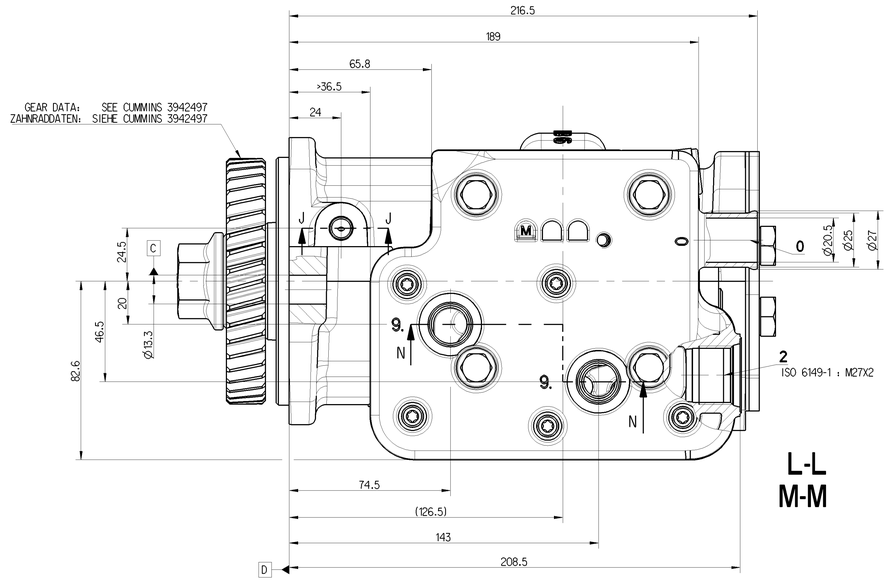

L-L
M-M

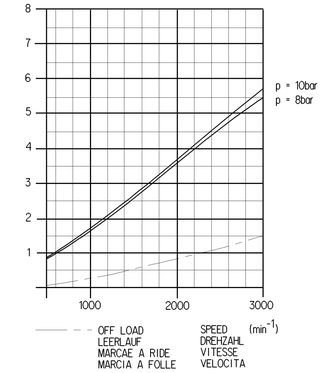

**** DIAGRAM FOR NATURAL ASPIRATED COMPRESSOR ONLY
DIAGRAMM NUR FUER NICHTAUFGELADENEN KOMPRESSOR

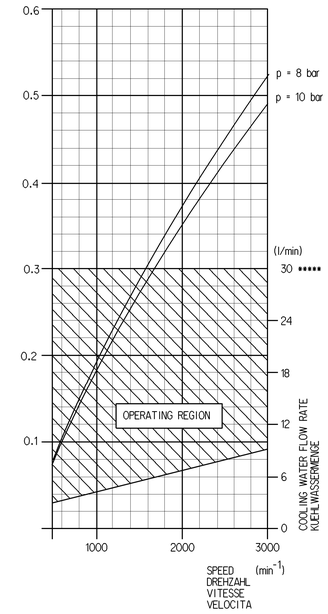

***** VELOCITY NOT TO EXCEED 3m/sec

OPENING PRESSURE OF PRESSURE RELIEF VALVE:
OEFFNUNGSDRUCK DES SICHERHEITSVENTILS: 19±3 bar

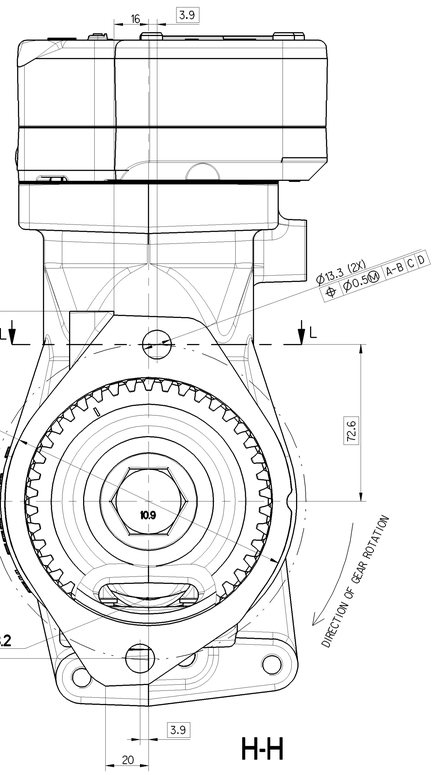

H-H

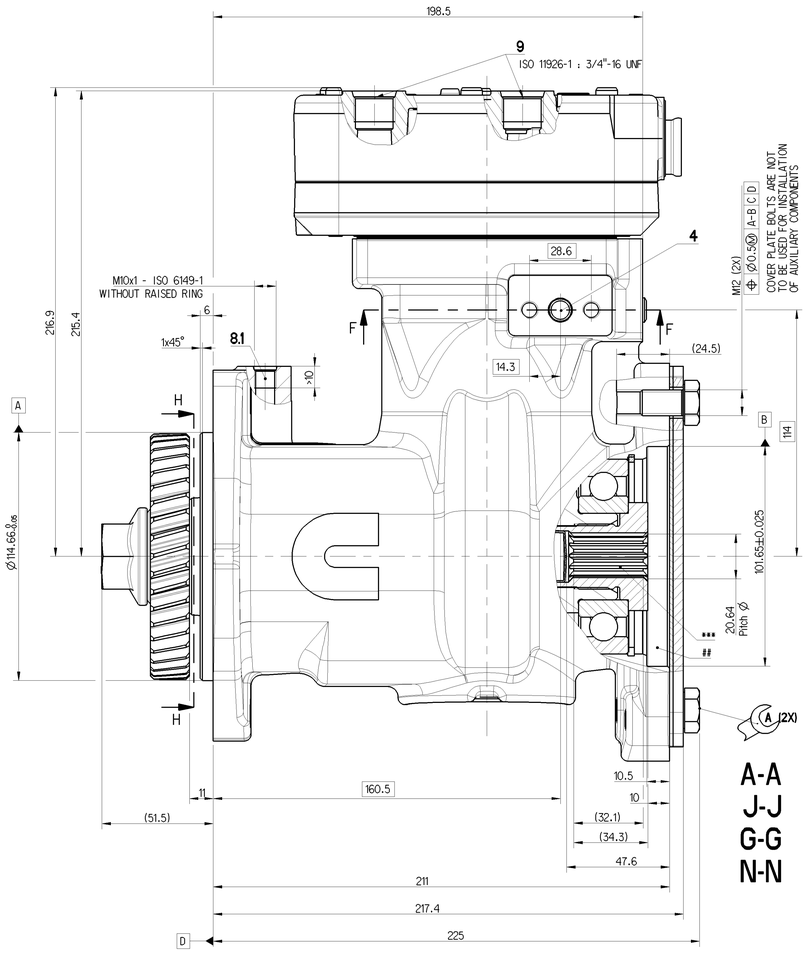

A-A
J-J
G-G
N-N

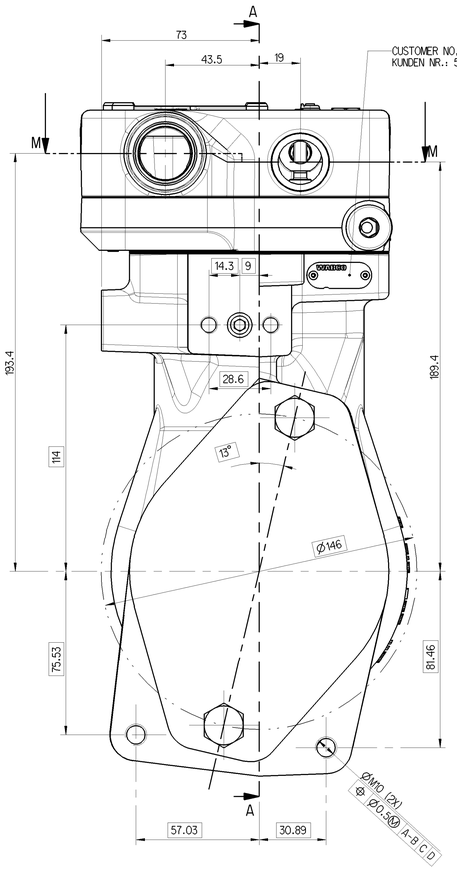

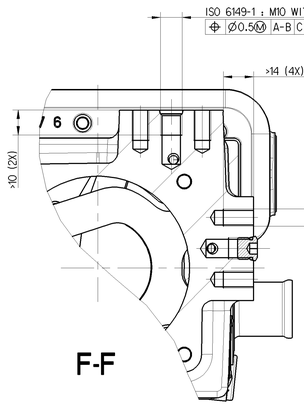

F-F

FREE FROM ASBESTOS
ASBESTFREI
EXEMPT D'AMIANTE
ESENTE D'AMIANTO

THE HYDRAULIC PUMP SHAFT MUST BE CONCENTRIC WITHIN 0.10 MM (0.004 INCH) RELATIVE TO PUMP PILOT AT MAXIMUM RATED HYDRAULIC PRESSURE.

*** FLAT ROOT SIDE FIT SPLINE 16/32.
13 TEETH TO CORRESPOND WITH ANSI B92.1-1970, CLASS 6.
EVOLENTEN ZAHNWELLENPROFIL 16/32,
13 ZAEHNE NACH ANSI B92.1-1970, KLASSE 6.

MAXIMUM TRANSMISSIBLE TORQUE = 155FT-LBS

(...) AUXILIARY DIMENSION
HILFSMASS
DIMENSION AUXILIAIRE
DIMENSIONE AUSILIARIA

THIRD ANGLE PROJECTION

MAX. PERMISSIBLE DISCHARGE PORT TEMPERATURE IN SERVICE
MAX. ZULAESSIGE DRUCKSTUTZENTEMPERATUR WAEHREND DES FAHRBETRIEBES 220° C
TEMPERATURE MAX. ADMISSIBLE EN SERVICE
TEMPERATURA MAX. AMMISSIBLE IN SERVIZIO

(..) AUXILLARY DIMENSION
HILFSMASS
DIMENSION AUXILIAIRE
DIMENSION AUSILIARIA

9. : COOLING CONNECTION
KUEHLWASSERANSCHLUSS M<= 60 Nm
CONNEXION DE FLUIDE DE REFROIDISSEMENT
COLLEGAMENTO LIQUIDO REFRIGERANTE

8.1 : OIL SUPPLY
DRUCKOELANSCHLUSS M<= 25Nm
ORIFICE D'ARRIVEE D'HUILE
ORIFICIO D ARRIVO OLIO

8.2 : OIL DRAIN
OELRUECKLAUF
RETOUR D'HUILE
RITORNO OLIO

0 : INLET PORT
SAUGANSCHLUSS
ASPIRATION
ASPIRATIONE

2 : DISCHARGE PORT
DRUCKANSCHLUSS M<= 100 Nm
REFOULEMENT
COMPRESSIONE

4 : GOVERNOR PORT
STEUERANSCHLUSS M<= 25 Nm
RIFICE DE COMMANDE
ORIFICIO DI COMMANDO

DRIVEN EQUIPMENT MUST HAVE ADEQUATE SPLINE TOOTH ENGAGEMENT TO MEET ALL DRIVE TORQUE REQUIREMENTS. ONLY PUMPS IN COMPLIANCE WITH SAE J744 FLANGE 101-2, SHAFT 22-4 ARE ALLOWED.

	THREAD ENGAGEMENT	Nm
A	<12	NOT RECOMMENDED
	12-18	35 MAX
	>18	50 MAX

General Specification: JED-334-0						
Further Technical Data: 911 153 013 0						
Doc. Code: 035			Sheet: 1/5 To 5/5			
General Tolerances JED-261						
		Range of Nominal Dimensions (in mm)				
Class 1)		≤ 50	> 50 ≤ 180	> 180 ≤ 400	> 400	∢
Fine		0.5	1.0	1.5	2.0	
Medium	X	1.0	2.0	3.0	4.0	±3°
Coarse		2.0	3.5	5.0	6.5	
Tapped Holes acc. JED-152						
1) Tolerance Class Applied Crossmarked						

Copyright WABCO®

Date	Signature		
Drawn 2015-05-21	Conley	WABCO	
Checked 2015-06-01	Poi	SINGLE CYLINDER COMPRESSOR EINZYLINDER KOMPRESSOR COMPRESSEUR MONOCYLINDRIQUE COMPRESSORE MONOCILINDRICO	
Expert Klatt			
Mass 18.951 kg	Scale 1:1	Material No. 911 153 013 R	Date of first issue: 2015-06-05
Size A 0	CAD System Pro/E	Doc.-Code 005	Language ML
ECN No. -	Revision -	Sheet 1/1	
Tachr. Reg. 5000		Replacement for	

100mm