TECHNICAL DATA
TECHNISCHE DATEN
CARACTERISTIQUES TECHNIQUES
CARATTERISTICHE TECHNICHE

BORE: BOHRUNG: ALESAGE: ALESAGGIO:	Ø85 mm
STROCKE: HUB: COURSE: CORSA:	56 mm
SWEPT VOLUME: HUBRAUM: CYLINDREE: CYLINDRATA:	318 ccm
MAXIMUM INTAKE PRESSURE: MAXIMALER EINLASS-DRUCK: PRESSION MAXIMUM DE PREISE: PRESSIONE MASSIMA DELLA PRESA:	p=3 bar
MAX. WORKING SPEED: MAX. BETRIEBSDREHZAHL: VITESSE D'UTILISATION MAXI: VELOCITA DI ESERCIZIO MAX.:	n_{max}= 3000 min^{-1}
OVERSPEED (TEMPORARY MAX. 4 SEC.) : UEBERDREHZAHL (KURZZEITIG MAX. 4 SEC.) : SURVITESSE (DE COURTE DUREE MAXI. 4 SEC.) : SOVRAVELOCITA (BREVE TEMPO SOLO MAX. 4 SEC.) :	n_{ue}=1.3xn_{max}
MAX. WORKING PRESSURE: MAX. BETRIEBSDRUCK : PRESSION D'UTILISATION MAXI. : PRESSIONE DI ESERCITIO MAX. :	p=10 bar **
MAX PRESSURE (TEMPORARILY <= 4 SEC.) : HOECHSTDRUCK (KURZZEITIG <= 4 SEC.) : PRESSION MAXI. (DE COURTE DUREE <= 4 SEC.) : PRESSIONE MASSIMA (BREVE TEMPO SOLO <= 4 SEC.) :	p=14 bar **
END PLAY OF CRANKSHAFT: AXIALSPIEL DER KURBELWELLE: JEU AXIAL DU VILEBROQUIN: GIOCO ASSIALE DELL 'ALBERO A GOMITO:	0.005 - 0.20mm

LUBRICATION: LUBRICATION SUPPLIED FROM ENGINE
SCHMIERART: UMLAUFSCHMIERUNG MIT DRUCKOELANSCHLUSS
GRAISSAGE: GRAISSAGE PAR CIRCULATION ALIMENTATION PAR LE MOTEUR
LUBRIFICATIONE: LUBRIFICATIONE A CIRCOLATIONE ALIMENTATIONE DAL MOTORE

MAX. PERMISSIBLE TILT DURING CONTINUOUS WORKING:
MAX. ZULAESSIGE NEIGUNG IM DAUERBETRIEB:
INCLINAISION MAX. ADMISE EN SERVICE CONTINU:
MASSIMA INCLINAZIONE AMMESSA IN CASO DI SERVIZIO CONTINUO:

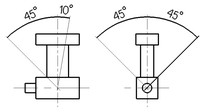

** MEASURING POINT : DISCHARGE PORT
MESSPUNKT : DRUCKANSCHLUSS
POINT DE MESURE : REFOULEMENT
PUNTO DI MESURA : COMPRESSIONE

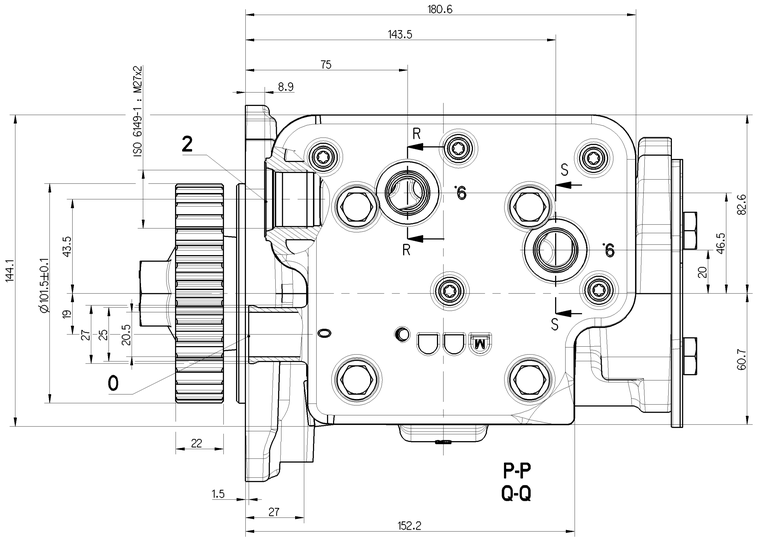

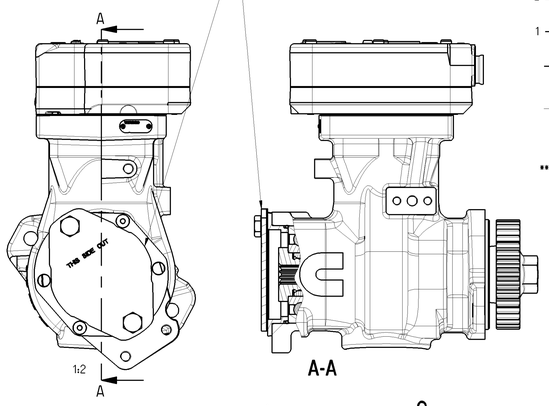

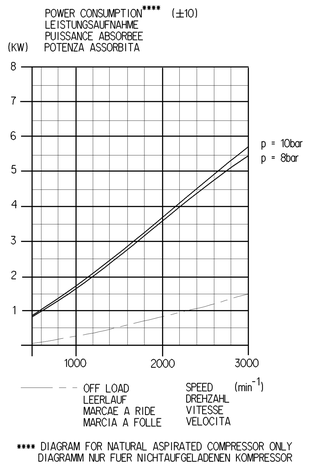

**** DIAGRAM FOR NATURAL ASPIRATED COMPRESSOR ONLY
DIAGRAMM NUR FUER NICHTAUFGELADENEN KOMPRESSOR

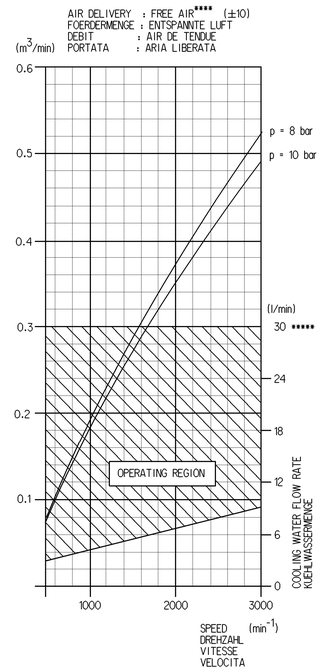

***** VELOCITY NOT TO EXCEED 3m/sec

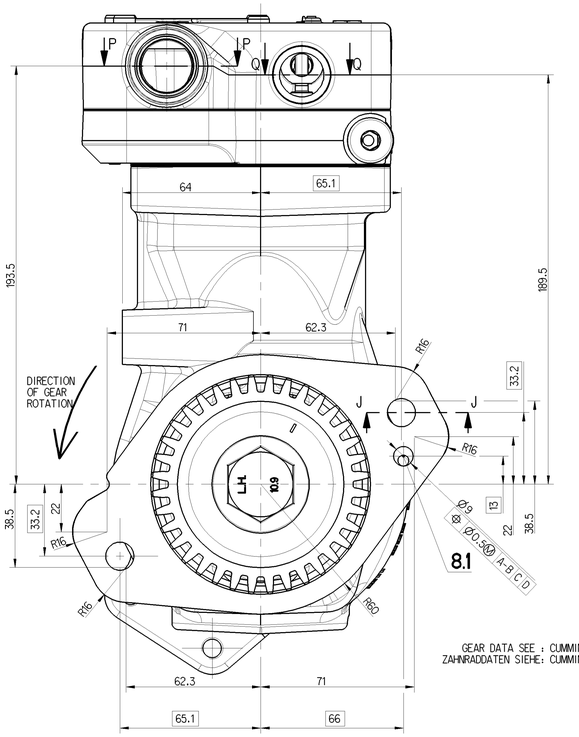

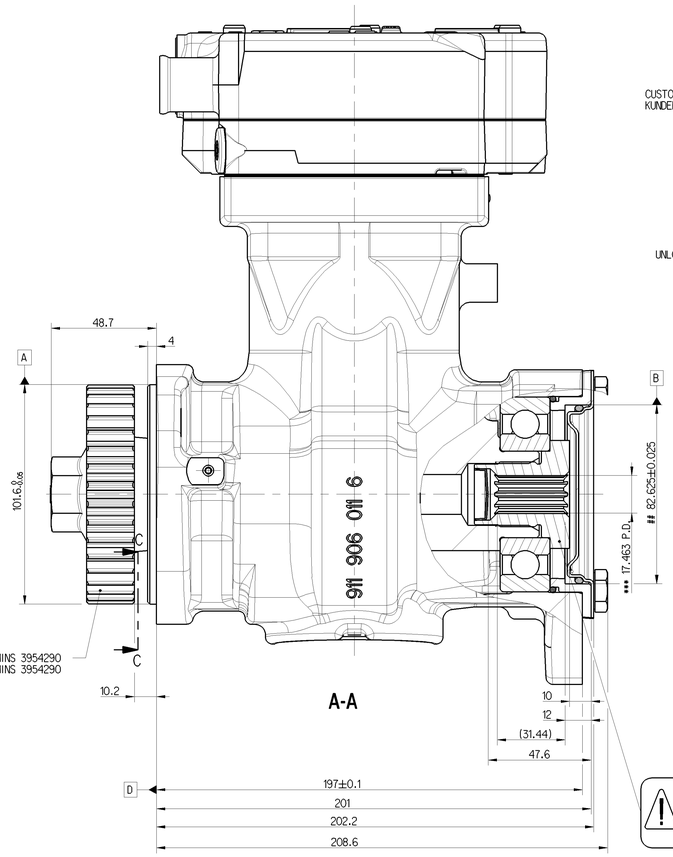

GEAR DATA SEE : CUMMINS 3954290
ZAHNRADDATEN SIEHE: CUMMINS 3954290

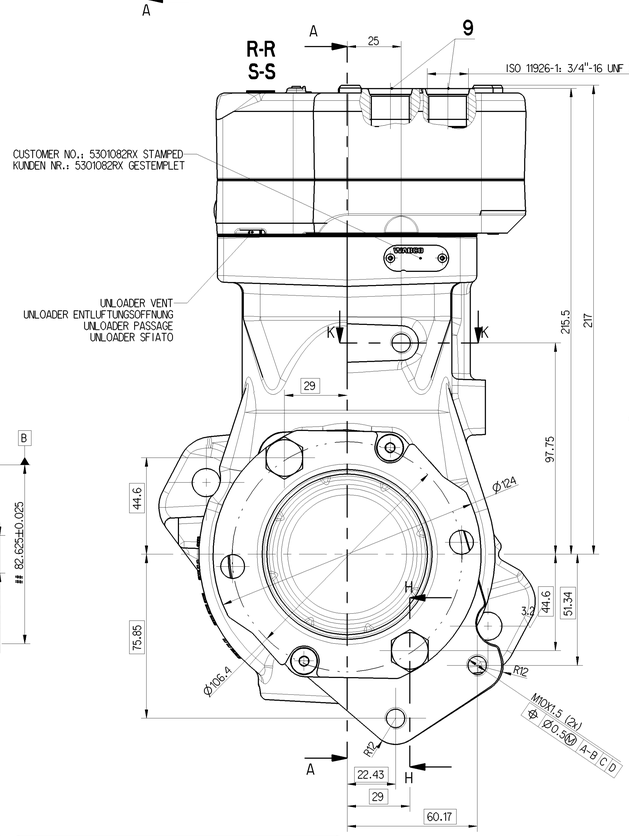

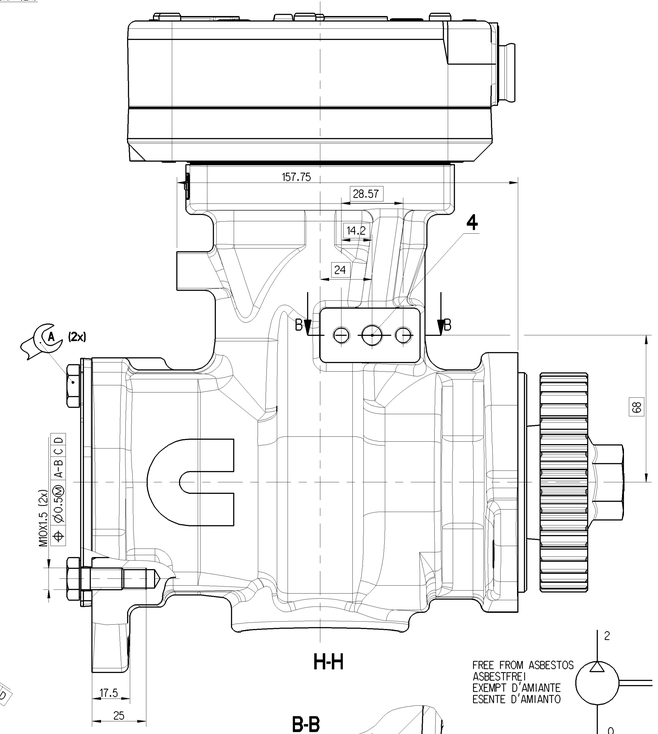

FREE FROM ASBESTOS
ASBESTFREI
EXEMPT D'AMIANTE
ESENTE D'AMIANTO

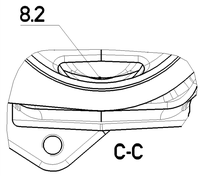

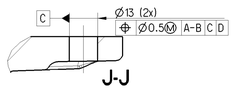

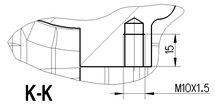

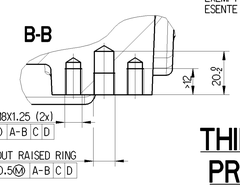

DRIVEN EQUIPMENT MUST HAVE ADEQUATE SPLINE TOOTH ENGAGEMENT TO MEET ALL DRIVE TORQUE REQUIREMENTS. ONLY PUMPS IN COMPLIANCE WITH SAE J744 FLANGE 82-2, SHAFT 19-4 ARE ALLOWED.

*** FLAT ROOT SIDE FIT SPLINE 16/32.
11 TEETH TO CORRESPOND WITH ANSI B92.1-1970. CLASS 6.

EVOLENTEN ZAHNWELLENPROFIL 16/32.
11 ZAEHNE NACH ANSI B92.1-1970, KLASSE 6.

THE HYDRAULIC PUMP SHAFT MUST BE CONCENTRIC WITHIN 0.10 MM (0.004 INCH) RELATIVE TO PUMP PILOT AT MAXIMUM RATED HYDRAULIC PRESSURE

Ⓐ	THREAD ENGAGEMENT	Nm
	<10	NOT RECOMMENDED
A	10-15	35 MAX
	>15	50 MAX

9. : COOLING CONNECTION
KUEHLWASSERANSCHLUSS M<= 60 Nm
CONNEXION DE FLUIDE DE REFROIDISSEMENT
COLLEGAMENTO LIQUIDO REFRIGERANTE

8.1 : OIL SUPPLY
DRUCKOELANSCHLUSS
ORIFICE D'ARRIVEE D'HUILE
ORIFICIO D ARRIVO OLIO

8.2 : OIL DRAIN
OELRUECKLAUF
RETOUR D'HUILE
RITORNO OLIO

0 : INLET PORT
SAUGANSCHLUSS
ASPIRATION
ASPIRATIONE

2 : DISCHARGE PORT
DRUCKANSCHLUSS M<= 100 Nm
REFOULEMENT
COMPRESSIONE

4 : GOVERNOR PORT
STEUERANSCHLUSS M<= 25 Nm
RIFICE DE COMMANDE
ORIFICIO DI COMMANDO

MAX. PERMISSIBLE DISCHARGE PORT TEMPERATURE IN SERVICE
MAX. ZULAESSIGE DRUCKSTUTZENTEMPERATUR WAEHREND DES FAHRBETRIEBES 220° C
TEMPERATURE MAX. ADMISSIBLE EN SERVICE
TEMPERATURA MAX. AMMISSIBLE IN SERVIZIO

(..) AUXILLARY DIMENSION
HILFSMASS
DIMENSION AUXILIAIRE
DIMENSION AUSILIARIA

OPENING PRESSURE OF PRESSURE RELIEF VALVE: 19±3 bar
OEFFNUNGSDRUCK DES SICHERHEITSVENTILS:

MAXIMUM TRANSMISSIBLE TORQUE = 125 FT-LBS
MAXIMALE TRANSMISSIBLE DREHKRAFT
COUPLE TRANSMISSIBLE MAXIMUM
COPPIA DI TORSIONE MASSIMA DI TRANSMISSIBLE

THIRD ANGLE PROJECTION

General Specification: JED-334-0			Copyright WABCO®		WABCO
Further Technical Data: 911 153 014 0			Date / Signature		SINGLE CYLINDER COMPRESSOR
Doc. Code: 035	Sheet: 1/5 To 5/5		Drawn: 2014-08-04 Corley		EINZYLINDERCOMPRESSOR
General Tolerances JED-261			Checked: 2014-08-04 Pai		COMPRESSEUR MONOCYLINDRIQUE
Class 11	Range of Nominal Dimensions (± mm) ≤ 50 / > 50 ≤ 180 / > 180 ≤ 400 / > 400		Expert: Klatt		COMPRESSORE MONOCILINDRICO
Fine	0.5 / 1.0 / 1.5 / 2.0		Mass: 16.478 kg	Scale: 1:1	Material No.: 911 153 014 R
Medium X	1.0 / 2.0 / 3.0 / 4.0	±3°	Size: A 0	CAD System: Pro/E	Doc.Code: 005 Language: ML Sheet: 1/1
Coarse	2.0 / 3.5 / 5.0 / 6.5		Revision: -	Techn. Resp.: 5000	Date of first issue: 2014-08-04
Tapped Holes acc. JED-152			ECN No.: 157625		Replacement for
‡‡ Tolerance Class Applied Crossnarrowed					

Ce document est la propriété de Wabco et ne peut être reproduit ou utilisé sans autorisation écrite de la part de Wabco. Les droits de propriété intellectuelle demeurent valables en dehors de ce document. Copyright: This document is the property of Wabco. It may not be reproduced or disclosed without written permission. Proprietary rights are retained by Wabco. Questo documento è proprietà di Wabco. Non può essere copiato o divulgato senza il consenso scritto di Wabco. Tutti i diritti di proprietà intellectuale restano validi al di fuori di questo documento. Questo documento es propiedad de Wabco. No puede ser reproducido o divulgado sin permiso escrito de Wabco. Los derechos de propiedad intelectual son válidos fuera de este documento. Este documento é propriedade da Wabco. Não pode ser reproduzido ou divulgado sem consentimento escrito da Wabco. Os direitos de propriedade intelectual são válidos fora deste documento.