TECHNICAL DATA
TECHNISCHE DATEN
CARACTERISTIQUES TECHNIQUES
CARATTERISTICHE TECHNICHE

BORE: BOHRUNG: ALESAGE: ALESAGGIO:	Ø85 mm
STROCKE: HUB: COURSE: CORSA:	56 mm
SWEPT VOLUME: HUBRAUM: CYLINDREE: CYLINDRATA:	318 ccm
MAXIMUM INTAKE PRESSURE: MAXIMALER EINLASS-DRUCK: PRESSION MAXIMUM DE PREISE: PRESSIONE MASSIMA DELLA PRESA:	p=3 bar
MAX. WORKING SPEED: MAX. BETRIEBSDREHZAHL: VITESSE D'UTILISATION MAXI: VELOCITA DI ESERCIZIO MAX.:	n_{max}= 3000 min^{-1}
OVERSPEED (TEMPORARY MAX. 4 SEC.) : UEBERDREHZAHL (KURZZEITIG MAX. 4 SEC.) : SURVITESSE (DE COURTE DUREE MAXI. 4 SEC.) : SOVRAVELOCITA (BREVE TEMPO SOLO MAX. 4 SEC.) :	n_{ue}=1.3*n_{max}
MAX. WORKING PRESSURE: MAX. BETRIEBSDRUCK : PRESSION D'UTILISATION MAXI. : PRESSIONE DI ESERCITIO MAX. :	p=10 bar **
MAX PRESSURE (TEMPORARILY <= 4 SEC.) : HOECHSTDRUCK (KURZZEITIG <= 4 SEC.) : PRESSION MAXI. (DE COURTE DUREE <= 4 SEC.) : PRESSIONE MASSIMA (BREVE TEMPO SOLO <= 4 SEC.) :	p=14 bar **
END PLAY OF CRANKSHAFT: AXIALSPIEL DER KURBELWELLE: JEU AXIAL DU VILEBRQUIN: GIOCO ASSIALE DELL 'ALBERO A GOMITO:	0.005 - 0.20mm

LUBRICATION: LUBRICATION SUPPLIED FROM ENGINE
SCHMIERART: UMLAUFSCHMIERUNG MIT DRUCKOELANSCHLUSS
GRAISSAGE: GRAISSAGE PAR CIRCULATION ALIMENTATION PAR LE MOTEUR
LUBRIFICATIONE: LUBRIFICATIONE A CIRCOLATIONE ALIMENTATIONE DAL MOTORE

MAX. PERMISSIBLE TILT DURING CONTINUOUS WORKING:
MAX. ZULAESSIGE NEIGUNG IM DAUERBETRIEB:
INCLINAISION MAX. ADMISE EN SERVICE CONTINU:
MASSIMA INCLINAZIONE AMMESSA IN CASO DI SERVIZIO CONTINUO:

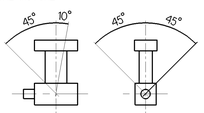

** MEASURING POINT : DISCHARGE PORT
MESSPUNKT : DRUCKANSCHLUSS
POINT DE MESURE : REFOULEMENT
PUNTO DI MESURA : COMPRESSIONE

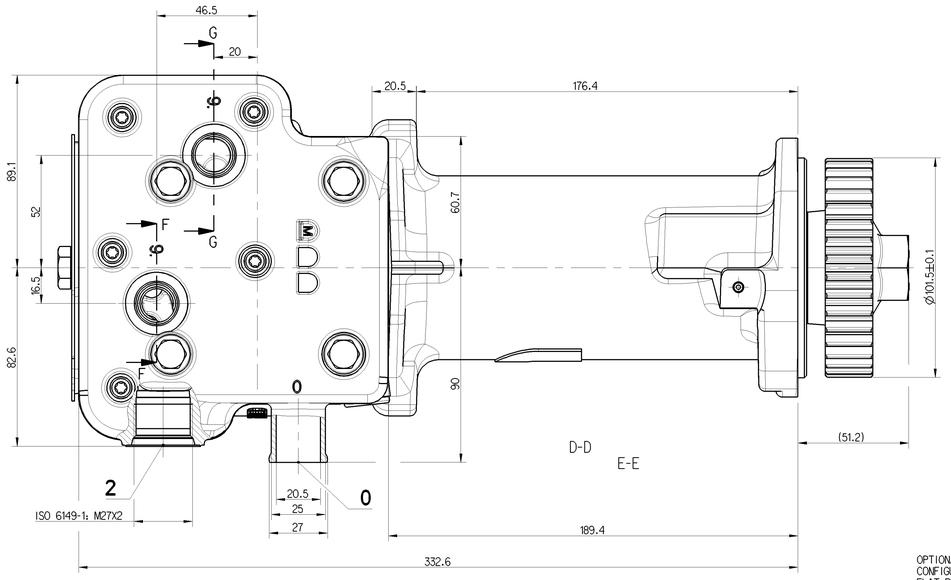

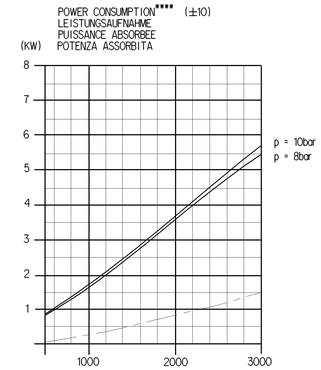

**** DIAGRAM FOR NATURAL ASPIRATED COMPRESSOR ONLY
DIAGRAMM NUR FUER NICHTAUFGELADENEN KOMPRESSOR

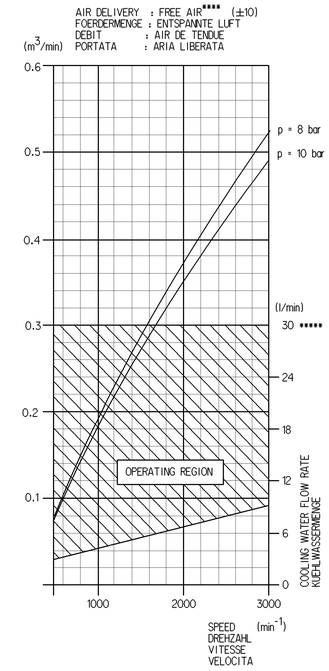

***** VELOCITY NOT TO EXCEED 3m/sec

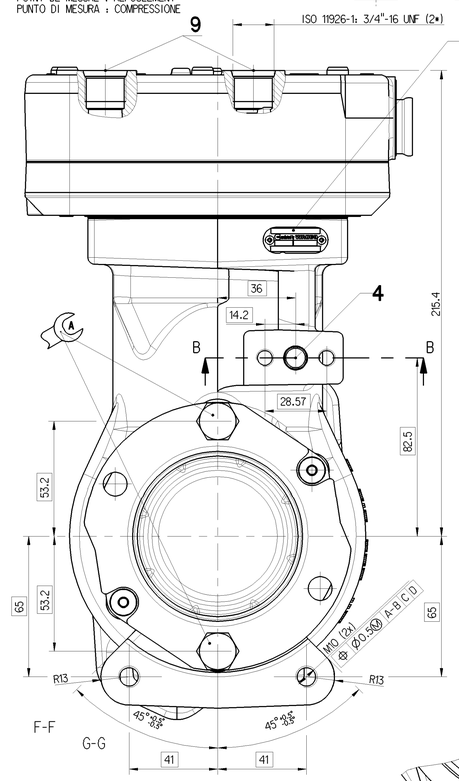

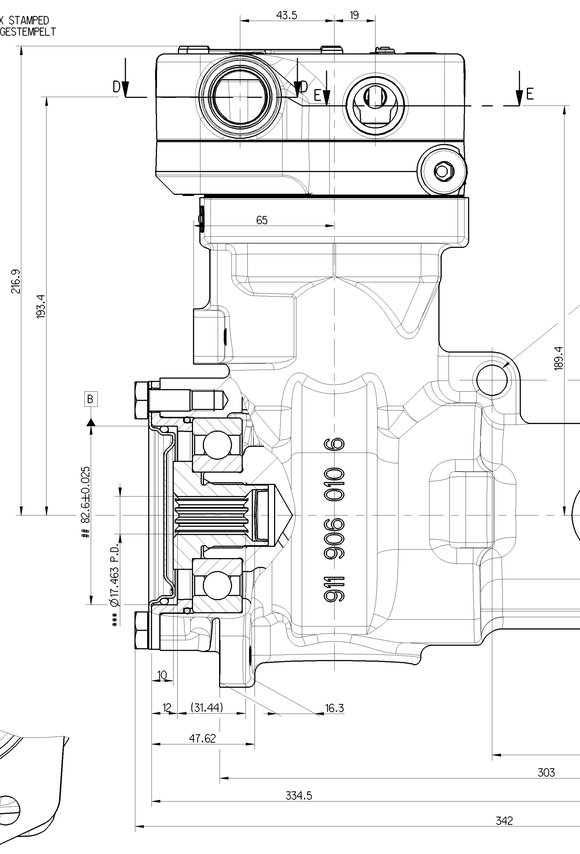

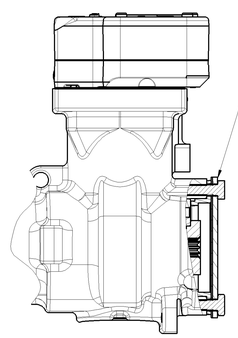

OPTIONAL
CONFIGURATION
FLAT REAR COVER
WITH CORK GASKET
TORQUE REAR COVER
BOLTS TO 14 ± 2 Nm

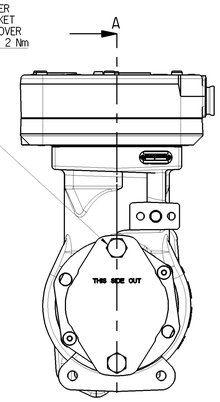

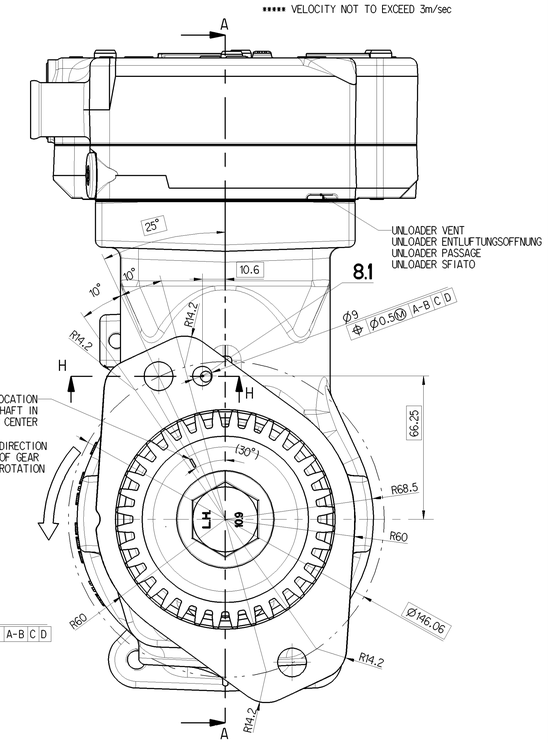

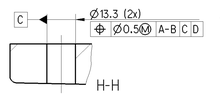

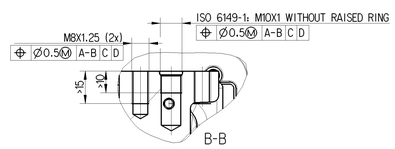

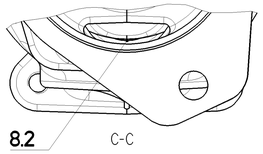

GEAR DATA SEE : CUMMINS 3954290
ZAHNRADDATEN SIEHE : CUMMINS 3954290

*** FLAT ROOT SIDE FIT SPLINE 16/32.
11 TEETH TO CORRESPOND WITH ANSI
B92.1-1970. CLASS 6.

EVOLENTEN ZAHNWELLENPROFIL 16/32.
11 ZAEHNE NACH ANSI B92.1-1970. KLASSE 6.

THE HYDRAULIC PUMP SHAFT MUST BE
CONCENTRIC WITHIN 0.10 MM (0.004 INCH)
RELATIVE TO PUMP PILOT AT MAXIMUM
RATED HYDRAULIC PRESSURE

MAXIMUM TRANSMISSIBLE TORQUE = 105 FT-LBS
MAXIMALE TRANSMISSIBLE DREHKRAFT
COUPLE TRANSMISSIBLE MAXIMUM
COPPIA DI TORSIONE MASSIMA DI TRANSMISSIBLE

	THREAD ENGAGEMENT	Nm
A	<10	NOT RECOMMENDED
	10-15	35 MAX
	>15	50 MAX

9. : COOLING CONNECTION
KUEHLWASSERANSCHLUSS M<= 60 Nm
CONNEXION DE FLUIDE DE REFROIDISSEMENT
COLLEGAMENTO LIQUIDO REFRIGERANTE

8.1 : OIL SUPPLY
DRUCKOELANSCHLUSS
ORIFICE D'ARRIVEE D'HUILE
ORIFICIO D ARRIVO OLIO

8.2 : OIL DRAIN
OELRUECKLAUF
RETOUR D'HUILE
RITORNO OLIO

0 : INLET PORT
SAUGANSCHLUSS
ASPIRATION
ASPIRATIONE

2 : DISCHARGE PORT
DRUCKANSCHLUSS M<= 100 Nm
REFOULEMENT
COMPRESSIONE

4 : GOVERNOR PORT
STEUERANSCHLUSS M<= 25 Nm
RIFICE DE COMMANDE
ORIFICIO DI COMMANDO

MAX. PERMISSIBLE DISCHARGE PORT TEMPERATURE IN SERVICE
MAX. ZULAESSIGE DRUCKSTUTZENTEMPERATUR WAEHREND DES FAHRBETRIEBES 220° C
TEMPERATURE MAX. ADMISSIBLE EN SERVICE
TEMPERATURA MAX. AMMISSIBLE IN SERVIZIO

(..) AUXILLARY DIMENSION
HILFSMASS
DIMENSION AUXILIAIRE
DIMENSION AUSILIARIA

OPENING PRESSURE OF PRESSURE RELIEF VALVE: 19±3 bar
OEFFNUNGSDRUCK DES SICHERHEITSVENTILS:

DRIVEN EQUIPMENT MUST HAVE ADEQUATE
SPLINE TOOTH ENGAGEMENT TO MEET
ALL DRIVE TORQUE REQUIREMENTS.
ONLY PUMPS IN COMPLIANCE WITH SAE J744
FLANGE 82-2, SHAFT 19-4 ARE ALLOWED.

THIRD ANGLE PROJECTION

FREE FROM ASBESTOS
ASBESTFREI
EXEMPT D'AMIANTE
ESENTE D'AMIANTO

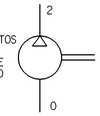

General Specification: JED-334-0					
Further Technical Data: 911 153 015 0					
Doc. Code: 035	Sheet: 1 To 5				
General Tolerances JED-261					
Range of Nominal Dimensions (in mm)					
Class 11	≤ 50	> 50 ≤ 180	> 180 ≤ 400	> 400	∠
Fine	0.5	1.0	1.5	2.0	
Medium X	1.0	2.0	3.0	4.0	±3°
Coarse	2.0	3.5	5.0	6.5	
Tapped Holes acc. JED-152					
11 Tolerance Class Applied Crossmarked					

Copyright WABCO®

Date	Signature		
Drawn 2014-07-24	Corley	WABCO	
Checked 2014-07-25	Poi	SINGLE CYLINDER COMPRESSOR EINZYLINDERCOMPRESSOR COMPRESSEUR MONOCYLINDRIQUE COMPRESSORE MONOCILINDRICO	
Export Klatt			
Mass kg: 19.316	Scale: 1:1	Material No. 911 153 015 R	Date of first issue: 2014-04-08
Size: A	CAD System: Pro/E	ECN No.: 165349	Revision: 1 A
		Tachr. Reg.: 5000	Doc.-Code: 005 Language: ML Sheet: 1/1
		Replacement for	

100mm