TECHNICAL DATA
TECHNISCHE DATEN
CARACTERISTIQUES TECHNIQUES
CARATTERISTICHE TECHNICHE

BORE: BOHRUNG: ALESAGE: ALESAGGIO:	Ø85 mm
STROCKE: HUB: COURSE: CORSA:	56 mm
SWEPT VOLUME: HUBRAUM: CYLINDREE: CYLINDRATA:	318 ccm
MAXIMUM INTAKE PRESSURE: MAXIMALER EINLASS-DRUCK: PRESSION MAXIMUM DE PREISE: PRESSIONE MASSIMA DELLA PRESA:	p=3 bar
MAX. WORKING SPEED: MAX. BETRIEBSDREHZAHL: VITESSE D'UTILISATION MAXI: VELOCITA DI ESERCIZIO MAX.:	n_{max}= 3000 min^{-1}
OVERSPEED (TEMPORARY MAX. 4 SEC.) : UEBERDREHZAHL (KURZZEITIG MAX. 4 SEC.) : SURVITESSE (DE COURTE DUREE MAXI. 4 SEC.) : SOVRAVELOCITA (BREVE TEMPO SOLO MAX. 4 SEC.) :	n_{ue}=1.3*n_{max}
MAX. WORKING PRESSURE: MAX. BETRIEBSDRUCK : PRESSION D'UTILISATION MAXI. : PRESSIONE DI ESERCITIO MAX. :	p=10 bar **
MAX PRESSURE (TEMPORARILY <= 4 SEC.) : HOECHSTDRUCK (KURZZEITIG <= 4 SEC.) : PRESSION MAXI. (DE COURTE DUREE <= 4 SEC.) : PRESSIONE MASSIMA (BREVE TEMPO SOLO <= 4 SEC.) :	p=14 bar **
END PLAY OF CRANKSHAFT: AXIALSPIEL DER KURBELWELLE: JEU AXIAL DU VILEBRQUIN: GIOCO ASSIALE DELL 'ALBERO A GOMITO:	0.005 - 0.20mm

LUBRICATION: LUBRICATION SUPPLIED FROM ENGINE
SCHMIERART: UMLAUFSCHMIERUNG MIT DRUCKOELANSCHLUSS
GRAISSAGE: GRAISSAGE PAR CIRCULATION ALIMENTATION PAR LE MOTEUR
LUBRIFICATIONE: LUBRIFICATIONE A CIRCOLATIONE ALIMENTATIONE DAL MOTORE

MAX. PERMISSIBLE TILT DURING CONTINUOUS WORKING:
MAX. ZULAESSIGE NEIGUNG IM DAUERBETRIEB:
INCLINAISION MAX. ADMISE EN SERVICE CONTINU:
MASSIMA INCLINAZIONE AMMESSA IN CASO DI SERVIZIO CONTINUO:

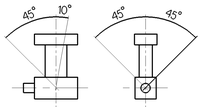

** MEASURING POINT : DISCHARGE PORT
MESSPUNKT : DRUCKANSCHLUSS
POINT DE MESURE : REFOULEMENT
PUNTO DI MESURA : COMPRESSIONE

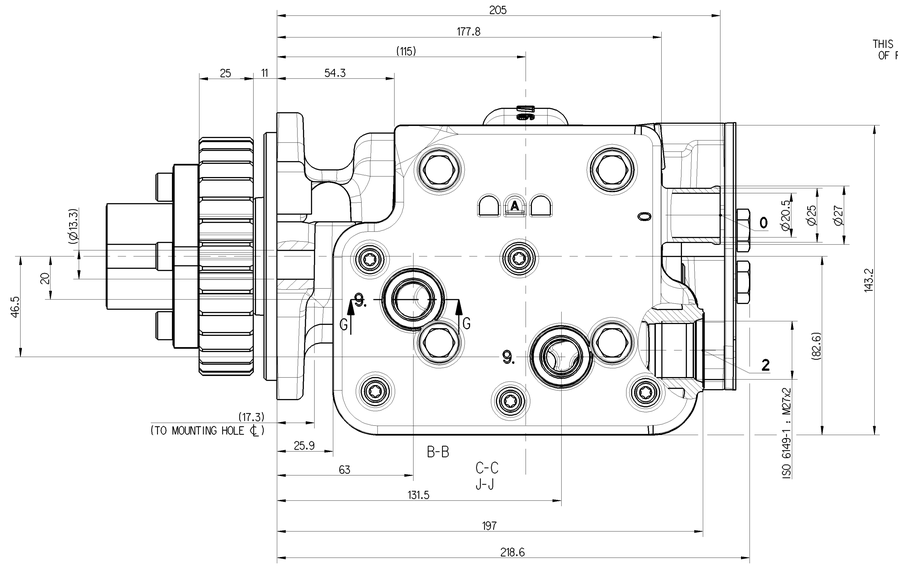

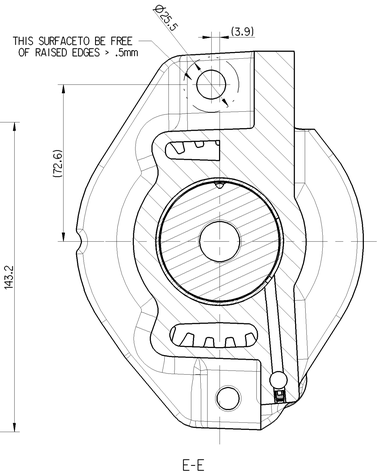

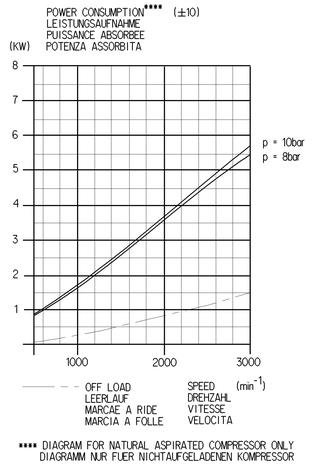

**** DIAGRAM FOR NATURAL ASPIRATED COMPRESSOR ONLY
DIAGRAMM NUR FUER NICHTAUFGELADENEN KOMPRESSOR

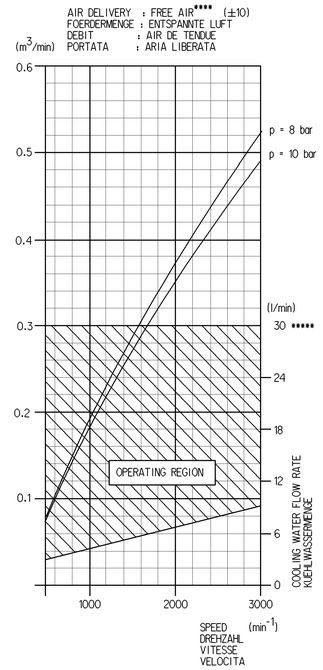

***** VELOCITY NOT TO EXCEED 3m/sec

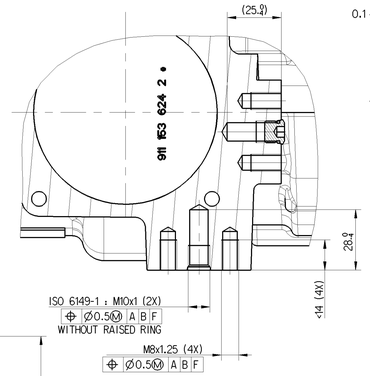

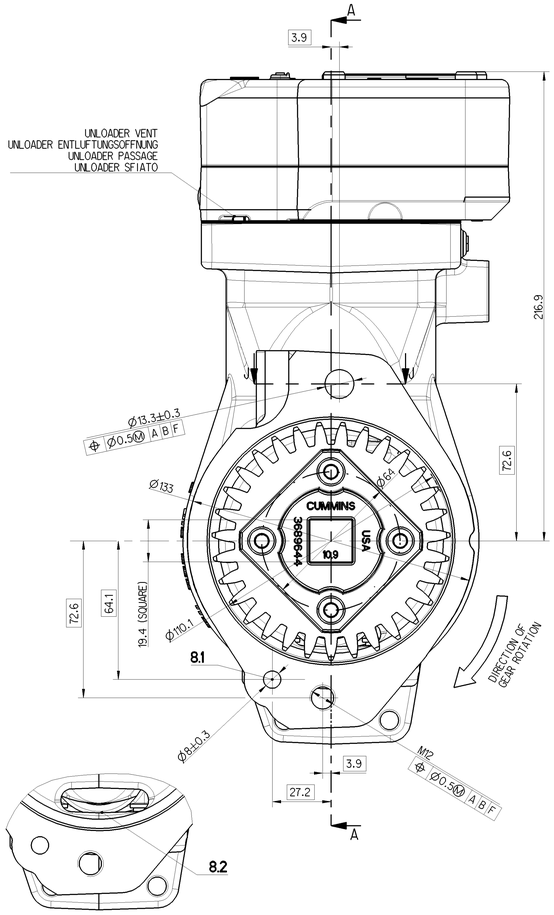

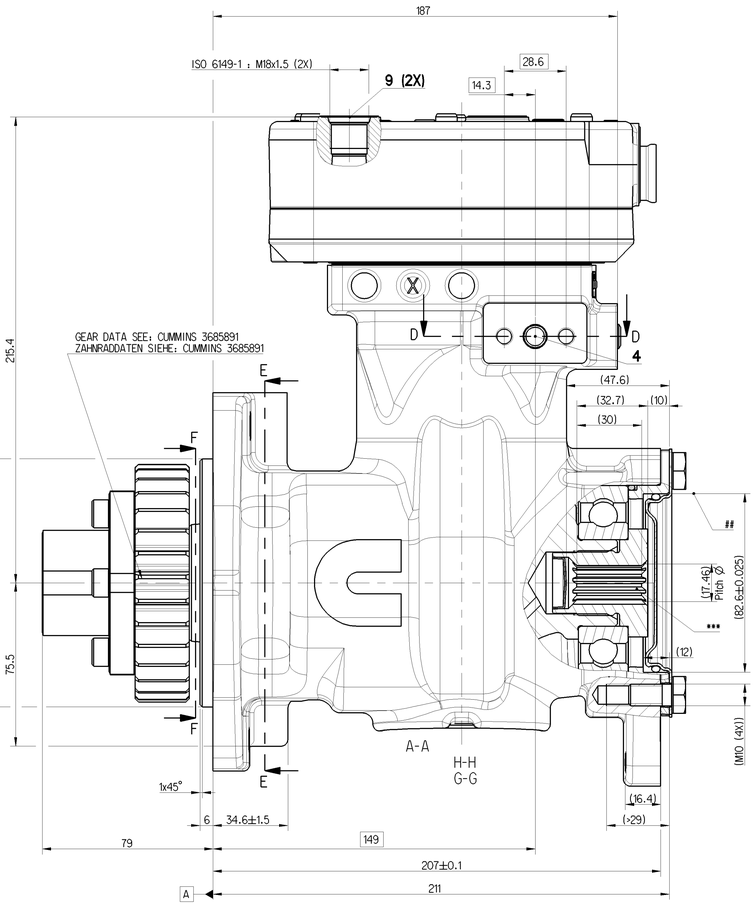

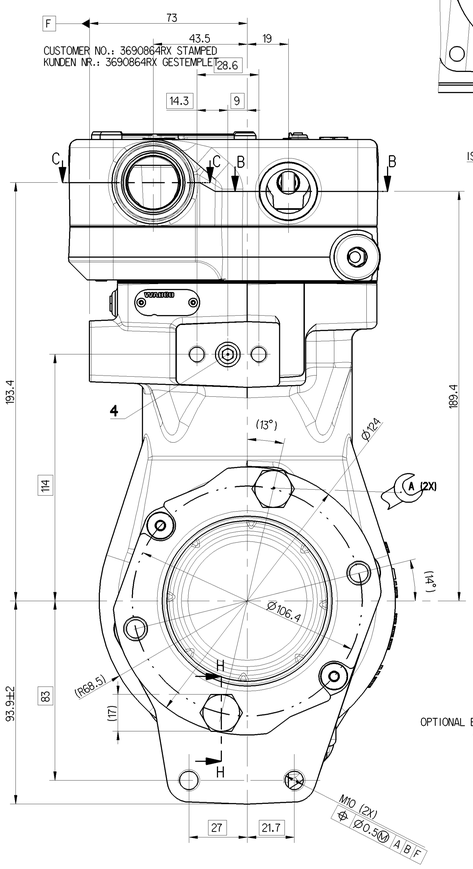

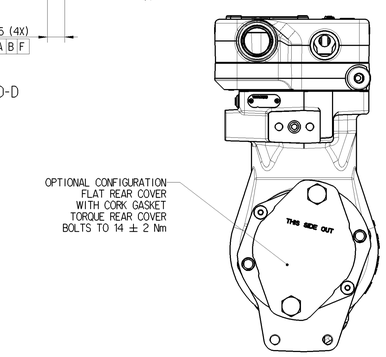

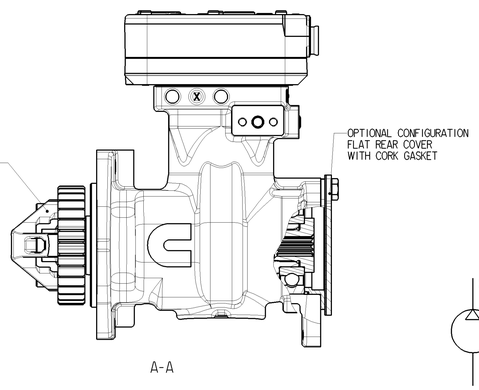

	THREAD ENGAGEMENT	Nm
A	<10	NOT RECOMMENDED
	10-15	35 MAX
	>15	50 MAX

9. : COOLING CONNECTION
KUEHLWASSERANSCHLUSS M<= 60 Nm
CONNEXION DE FLUIDE DE REFROIDISSEMENT
COLLEGAMENTO LIQUIDO REFRIGERANTE

8.1 : OIL SUPPLY
DRUCKOELANSCHLUSS
ORIFICE D'ARRIVEE D'HUILE
ORIFICIO D ARRIVO OLIO

8.2 : OIL DRAIN
OELRUECKLAUF
RETOUR D'HUILE
RITORNO OLIO

0 : INLET PORT
SAUGANSCHLUSS
ASPIRATION
ASPIRATIONE

2 : DISCHARGE PORT
DRUCKANSCHLUSS M<= 100 Nm
REFOULEMENT
COMPRESSIONE

4 : GOVERNOR PORT
STEUERANSCHLUSS M<= 25 Nm
RIFICE DE COMMANDE
ORIFICIO DI COMMANDO

(...) AUXILIARY DIMENSION
HILFSMASS
DIMENSION AUXILIAIRE
DIMENSIONE AUSILIARIA

*** FLAT ROOT SIDE FIT SPLINE 16/32.
11 TEETH TO CORRESPOND WITH ANSI
B92.1-1970, CLASS 6.

EVOLENTEN ZAHNWELLENPROFIL 16/32.
11 ZAEHNE NACH ANSI B92.1-1970, KLASSE 6.

THE HYDRAULIC PUMP SHAFT MUST BE
CONCENTRIC WITHIN 0.10 MM (0.004 INCH)
RELATIVE TO PUMP PILOT AT MAXIMUM
RATED HYDRAULIC PRESSURE

OPENING PRESSURE OF PRESSURE RELIEF VALVE: 19±3 bar
OEFFNUNGSDRUCK DES SICHERHEITSVENTILS:

MAXIMUM TRANSMISSIBLE TORQUE = 125 FT-LBS
MAXIMALE TRANSMISSIBLE DREHKRAFT
COUPLE TRANSMISSIBLE MAXIMUM
COPPIA DI TORSIONE MASSIMA DI TRANSMISSIBLE

DRIVEN EQUIPMENT MUST HAVE ADEQUATE
SPLINE TOOTH ENGAGEMENT TO MEET
ALL DRIVE TORQUE REQUIREMENTS.
ONLY PUMPS IN COMPLIANCE WITH SAE J744
FLANGE 82-2, SHAFT 19-4 ARE ALLOWED.

THIRD ANGLE PROJECTION

General Specifications: JED-334-0							
Further Technical Data: 911 153 019 0							
Doc. Code: 035			Sheet: 1/5 To 5/5				
General Tolerances JED-261							
		Range of Nominal Dimensions (in mm)					
Class	11	≤ 50	> 50 ≤ 180	> 180 ≤ 400	> 400		
Fine		0.5	1.0	1.5	2.0		
Medium	X	1.0	2.0	3.0	4.0	±3°	
Coarse		2.0	3.5	5.0	6.5		
Tapped Holes acc. JED-152							
11 Tolerance Class Applied Crossmarked							

Copyright WABCO®

Date	Signature		WABCO
Drawn 2015-02-23	Corley	SINGLE CYLINDER COMPRESSOR EINZYLINDERKOMPRESSOR COMPRESSEUR MONOCYLINDRIQUE COMPRESSORE MONOCILINDRICO	
Checked 2015-02-24	Poi		
Agent	Kiott		
Mass 18.333 kg	Scale 1:1	Material No. 911 153 019 R	Date of first issue: 2015-02-24
Size A 0	CAD System Pro/E		Doc.Code 035 / Language ML / Sheet 1/1
		ECN No. - / Revision - / Techn. Resp. 5000	Replacement for

The German version is the binding version for the translation. Translations in other languages are provided for convenience only. In case of discrepancies between the German version and other versions, the German version shall prevail. Copyright in this document and any copies or extracts of it may only be made with WABCO's express consent. Copyright in this document and any copies or extracts of it may only be made with WABCO's express consent. Copying, distribution and utilisation of the contents of this document are prohibited to the extent that they are not expressly permitted. Contraventions of the above provisions are prohibited to the extent of the grant of patent or registration of a utility model or design. The above is to be observed in the case of the grant of a patent or registration of a utility model or design.