TECHNICAL DATA
TECHNISCHE DATEN
CARACTERISTIQUES TECHNIQUES
CARATTERISTICHE TECHNICHE

BORE: BOHRUNG: ALESAGE: ALESAGGIO:	Ø75 mm
STROCKE: HUB: COURSE: CORSA:	56 mm
SWEPT VOLUME: HUBRAUM: CYLINDREE: CYLINDRATA:	247 ccm
MAXIMUM INTAKE PRESSURE: MAXIMALER EINLASS-DRUCK: PRESSION MAXIMUM DE PREISE: PRESSIONE MASSIMA DELLA PRESA:	p=2.5 bar
MAX. WORKING SPEED: MAX. BETRIEBSDREHZAHL: VITESSE D'UTILISATION MAXI: VELOCITA DI ESERCIZIO MAX.:	n_{max}= 3000 min^{-1}
OVERSPEED (TEMPORARY MAX. 4 SEC.): UEBERDREHZAHL (KURZZEITIG MAX. 4 SEC.): SURVITESSE (DE COURTE DUREE MAXI. 4 SEC.): SOVRAVELOCITA (BREVE TEMPO SOLO MAX. 4 SEC.):	n_{ue}=1.3*n_{max}
MAX. WORKING PRESSURE: MAX. BETRIEBSDRUCK: PRESSION D'UTILISATION MAXI.: PRESSIONE DI ESERCITIO MAX.:	p=10 bar **
MAX PRESSURE (TEMPORARILY <= 4 SEC.): HOECHSTDRUCK (KURZZEITIG <= 4 SEC.): PRESSION MAXI. (DE COURTE DUREE <= 4 SEC.): PRESSIONE MASSIMA (BREVE TEMPO SOLO <= 4 SEC.):	p=14 bar **
END PLAY OF CRANKSHAFT: AXIALSPIEL DER KURBELWELLE: JEU AXIAL DU VILEBROQUIN: GIOCO ASSIALE DELL 'ALBERO A GOMITO:	0.005 - 0.20mm

LUBRICATION: LUBRICATION SUPPLIED FROM ENGINE
SCHMIERART: UMLAUFSCHMIERUNG MIT DRUCKOELANSCHLUSS
GRAISSAGE: GRAISSAGE PAR CIRCULATION ALIMENTATION PAR LE MOTEUR
LUBRIFICATIONE: LUBRIFICATIONE A CIRCOLATIONE ALIMENTATIONE DAL MOTORE

MAX. PERMISSIBLE TILT DURING CONTINUOUS WORKING:
MAX. ZULAESSIGE NEIGUNG IM DAUERBETRIEB:
INCLINAISION MAX. ADMISE EN SERVICE CONTINU:
MASSIMA INCLINAZIONE AMMESSA IN CASO DI SERVIZIO CONTINUO:

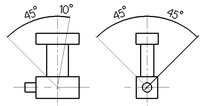

** MEASURING POINT : DISCHARGE PORT
MESSPUNKT : DRUCKANSCHLUSS
POINT DE MESURE : REFOULEMENT
PUNTO DI MESURA : COMPRESSIONE

Flat root side fit spline 16/32 11 teeth to correspond with ANSI B92.1-1970, class 6
Envolventen-Zahnwellenprofil 16/32 11 Zähne nach ANSI B92.1-1970, Klasse 6

DRIVEN EQUIPMENT MUST HAVE ADEQUATE SPLINE TOOTH ENGAGEMENT TO MEET ALL DRIVE TORQUE REQUIREMENTS. ONLY PUMPS IN COMPLIANCE WITH SAE J744 FLANGE 82-2, SHAFT 19-4 ARE ALLOWED.

MAXIMUM PERMISSIBLE SPLINE TORQUE - 105 FT-LBS.

HYDRAULIC PUMP SHAFT MUST BE CONCENTRIC WITHIN 0.10MM (0.004IN.) RELATIVE TO PUMP PILOT AT MAXIMUM RATED HYDRAULIC PRESSURE.

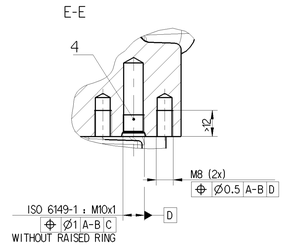

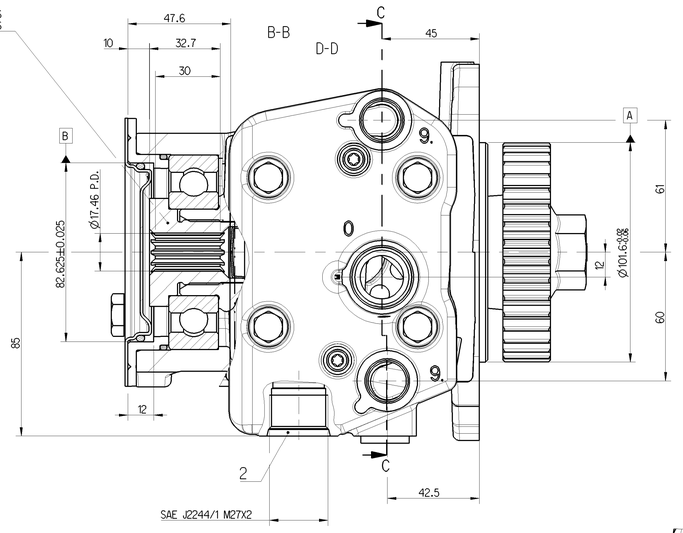

* MAX. PERMISSIBLE DISCHARGE PORT TEMPERATURE IN SERVICE
MAX. ZULAESSIGE DRUCKSTUTZENTEMPERATUR WAEHREND DES FAHRBETRIEBES 220° C
TEMPERATURE MAX. ADMISSIBLE EN SERVICE
TEMPERATURA MAX. AMMISSIBLE IN SERVIZIO

POWER CONSUMPTION**** (±10)
LEISTUNGSAUFNAHME
PUISSANCE ABSORBEE
POTENZA ASSORBITA

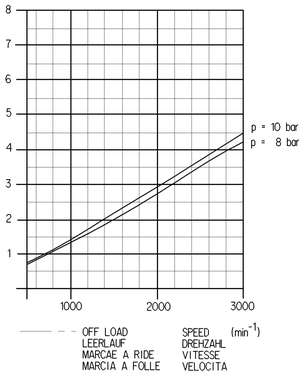

**** DIAGRAM FOR NATURAL ASPIRATED COMPRESSOR ONLY
DIAGRAMM NUR FUER NICHTAUFGELADENEN KOMPRESSOR

AIR DELIVERY : FREE AIR**** (±10)
FOERDERMENGE : ENTSPANNTE LUFT
DEBIT : AIR DE TENDUE
PORTATA : ARIA LIBERATA

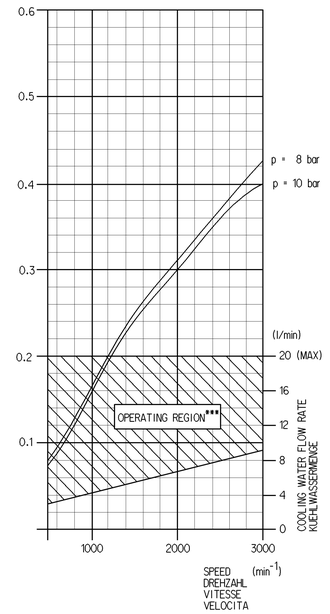

*** VELOCITY NOT TO EXCEED 3m/sec

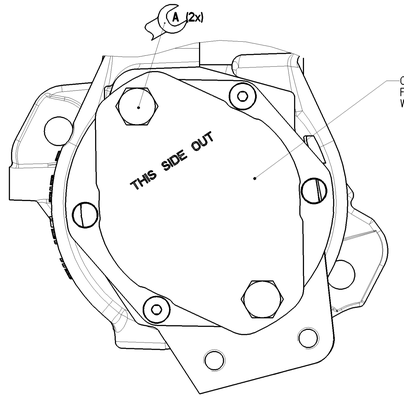

OPTIONAL CONFIGURATION
FLAT REAR COVER
WITH CORK GASKET

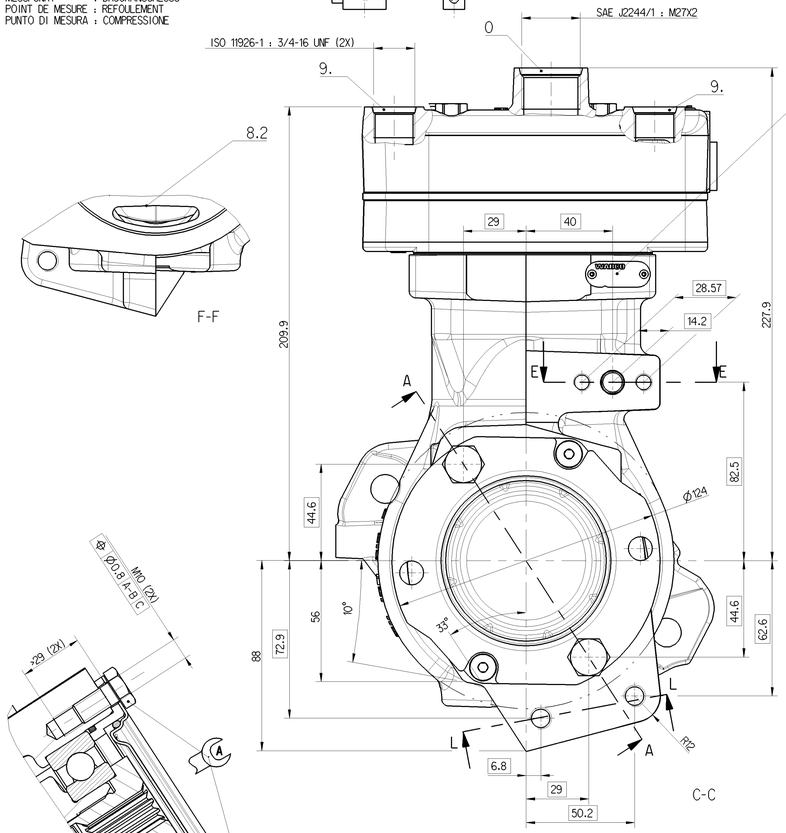

CUSTOMER NO.: 5286964RX STAMPED
KUNDEN NR.: 5286964RX GESTEMPLET

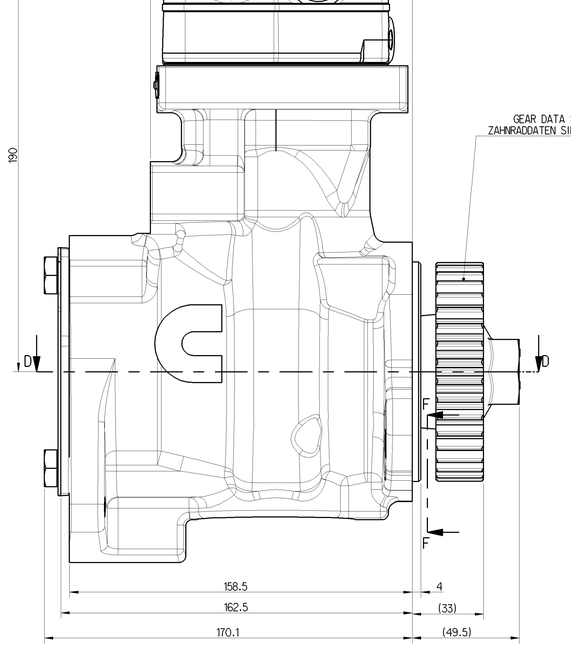

GEAR DATA SEE : CUMMINS 3954290
ZAHNRADDATEN SIEHE : CUMMINS 3954290

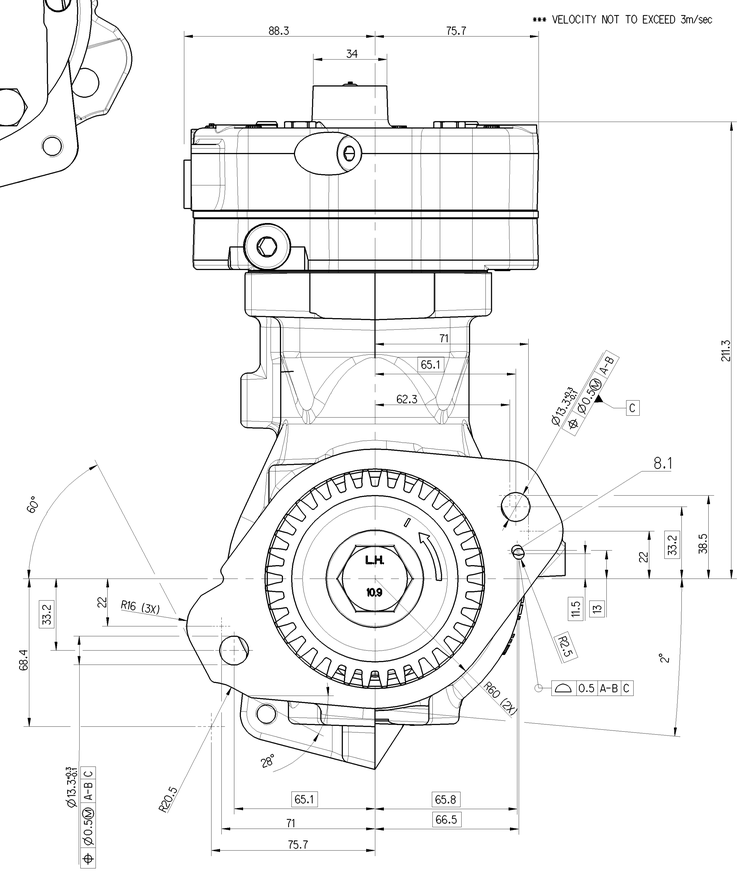

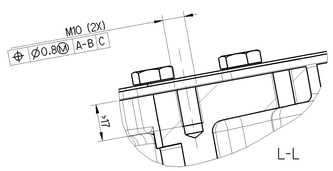

9. : COOLANT CONNECTION
KUEHLWASSERANSCHLUSS M <= 60 Nm
CONNEXION DE FLUIDE DE REFROIDISSEMENT
COLLEGAMENTO LIQUIDO REFRIGERANTE

8.1 : OIL SUPPLY
DRUCKOELANSCHLUSS
ORIFICE D'ARRIVEE D'HUILE
ORIFICIO D ARRIVO OLIO

8.2 : OIL DRAIN
OELRUECKLAUF
RETOUR D'HUILE
RITORNO OLIO

O : INLET PORT
SAUGANSCHLUSS M <= 100 Nm
ASPIRATION
ASPIRATIONE

2 : DISCHARGE PORT
DRUCKANSCHLUSS M <= 100 Nm
REFOULEMENT
COMPRESSIONE

4 : GOVERNOR PORT
STEUERANSCHLUSS M <= 15 Nm
RIFICE DE COMMANDE
ORIFICIO DI COMMANDO

FREE FROM ASBESTOS
ASBESTFREI
EXEMPT D'AMIANTE
ESENTE D'AMIANTO

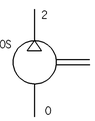

OPENING PRESSURE OF PRESSURE RELIEF VALVE: 19±3 bar
OEFFNUNGSDRUCK DES SICHERHEITSVENTILS:

THIRD ANGLE PROJECTION

THREAD ENGAGEMENT	Nm
<10	NOT RECOMMENDED
10-15	35 MAX
>15	50 MAX

A

General Specification: JED-334-0						
Further Technical Data: 911 154 510 0						
Doc. Code: 035			Sheet: 1/5		To 5/5	
General Tolerances JED-261						
		Range of Nominal Dimensions (in mm)				
Class 1)		≤ 50	> 50 ≤ 180	> 180 ≤ 400	> 400	∠
Fine		0.5	1.0	1.5	2.0	
Medium	X	1.0	2.0	3.0	4.0	±3°
Coarse		2.0	3.5	5.0	6.5	
Tapped Holes acc. JED-152						
1) Tolerance Class Applies Crosshatched						

Copyright WABCO®

Date	Signature	
Order: 2014-06-02	Corley	
Checked: 2014-06-11	Poi	
Export: Poi		

WABCO

SINGLE CYLINDER COMPRESSOR
EINZYLINDER KOMPRESSOR
COMPRESSEUR MONOCILINDRIQUE
COMPRESSORE MONOCILINDRICO

Mass: 14,710 KG	Scale: 1:1	Material No.: 911 154 510 R		Date of first issue: 2014-06-11
Size: A 0	CAD System: Pro/E	Doc.Code: 005	Language: ML	Sheet: 1/1
ECN-No.: -	Revision: -	Techn. Prep.: 5000	Replaced by: 911 154 510 0	

100mm

Die Information hierüber, ihre Benutzung und Mitteilung an Dritte sind untersagt. Zuwiderhandlungen verpflichten zu Schadenersatz. Alle Rechte vorbehalten, insbesondere für den Fall der Patenterteilung oder Gebrauchsmustereintragung.
The information herein is the property of WABCO. Its use and disclosure to third parties are prohibited. Offenders will be held liable for damages. All rights reserved, in the event of patent grant or registration of a utility model or design.
Les renseignements contenus ici sont la propriété de WABCO. Leur utilisation et leur divulgation à des tiers sont interdites. Les contrevenants seront tenus pour responsables des dommages et intérêts. Tous droits réservés, en cas de délivrance d'un brevet ou d'enregistrement d'un modèle d'utilité ou d'un dessin ou modèle.
Le informazioni contenute in questo documento sono proprietà della WABCO. Ne è vietato l'uso e la divulgazione a terzi. I trasgressori sono tenuti al risarcimento dei danni. Tutti i diritti riservati, in caso di rilascio di un brevetto o di registrazione di un modello di utilità o di un disegno o modello.