TECHNICAL DATA
TECHNISCHE DATEN
CARACTERISTIQUES TECHNIQUES
CARATTERISTICHE TECHNICHE

BORE
BOHRUNG
ALESAGE: ---------- Ø85
ALESAGGIO

STROKE
HUB
COURSE: ---------- 56mm
CORSA

SWEPT VOLUME
HUBRAUM
CYLINDREE: ---------- 318cm^3
CYLIDRATA

MAX. WORKING SPEED
MAX. BETRIEBSDREHZAHL
VITESSE D'UTILISATION MAXI.: ---------- $n_{max.}$ = 3000 min^{-1}
VELOCITA DI ESERCIZIO MAX.

OVERSPEED (TEMPORARY MAX. 4 SEC.)
UEBERDREHZAHL (KURZZEITIG MAX. 4 SEC.)
SURVITESSE (DE COURTE DUREE MAXI. 4 SEC.): ---------- n_{ue}=1.3*$n_{max.}$
SOVRAVELOCITA (BREVE TEMPO SOLO MAX. 4 SEC.)

MAX. WORKING PRESSURE
MAX. BETRIEBSDRUCK
PRESSION D'UTILISATION MAXI.: ---------- p=10bar *
PRESSIONE DI ESERCIZIO MAX.

MAX. PRESSURE (TEMPORARILY =4 SEC.)
HOECHSTDRUCK (KURZZEITIG =4SEC.)
PRESSION MAXI. (DE COURTE DUREE =4 SEC.): ---------- p = 14bar *
PRESSIONE MASSIMA (BREVE TEMPO SOLO =4 SEC.)

LUBRICATION: LUBRICATION SUPPLIED FROM ENGINE
SCHMIERART: UMLAUFSCHMIERUNG MIT DRUCKOELANSCHLUSS
GRAISAGE: GRAISSAGE PAR CIRCULATION ALIMENTATION PAR LE MOTEUR
LUBRIFICATIONE: LUBRIFICATIONE A CIRCOLATIONE ALIMENTATIONE DAL MOTORE

MAX. PERMISSIBLE TILT DURING CONTINUOUS WORKING
MAX. ZULAESSIGE NEIGUNG IM DAUERBETRIEB
INCLINAISION MAX. ADMISSE EN SERVICE CONTINU:
MASSIMA INCLINAZIONE AMMESSA IN CASO DI SERVIZIO CONTINUO

END PLAY OF CRANKSHAFT
AXIALSPIEL DER KURBELWELLE
JEU AXIAL DU VIREBREQUIN: ---------- 0.08...0.38mm
GIOCO ASSIALE DELL'ALBERO A GOMITO

* MEASURING POINT : DISCHARGE PORT
MESSPUNKT : DRUCKANSCHLUSS
POINT DE MESURA : REFOULEMENT
PUNTO DI MESURA : COMPRESSIONE

9.- COOLING CONNECTION
KUEHLWASSERANSCHLUSS
CONNEXION DE FLUIDE DE REFROIDISSEMENT
COLLEGAMENTO LIQUIDO REFRIGERANTE

8.1- OIL SUPPLY
DRUCKOELANSCHLUSS
ORIFICE D'ARIVEE D'HUILE
ORIFICIO D'ARRIVO OLIO

8.2- OIL DRAIN
OELRUECKLAUF
RETOUR D'HUILE
RITORNO D' OLIO

2- DISCHARGE PORT
DRUCKANSCHLUSS
REFOULEMENT
COMPRESSIONE

0- INLET PORT
SAUGANSCHLUSS
ASPIRATION
ASPIRATIONE

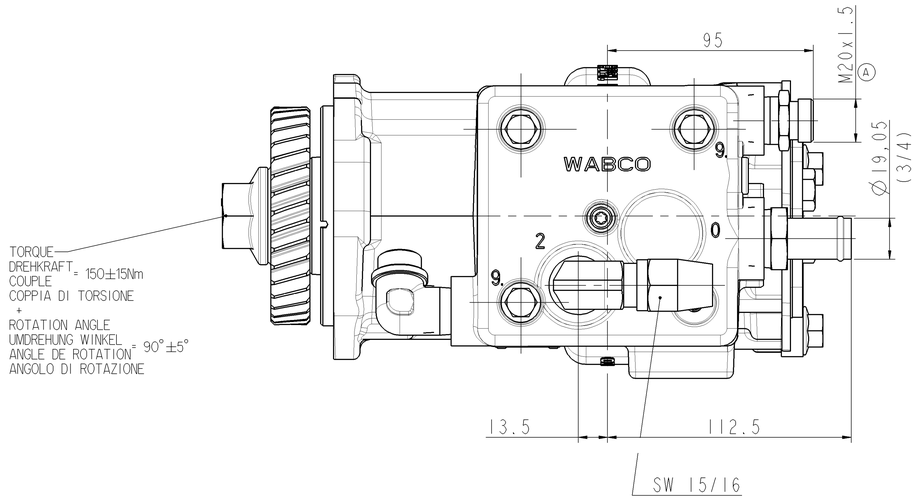

**** DIAGRAM FOR NATURALLY ASPIRATED COMPRESSOR ONLY
DIAGRAMM NUR FUER NICHTAUFGELADENEN KOMPRESSOR

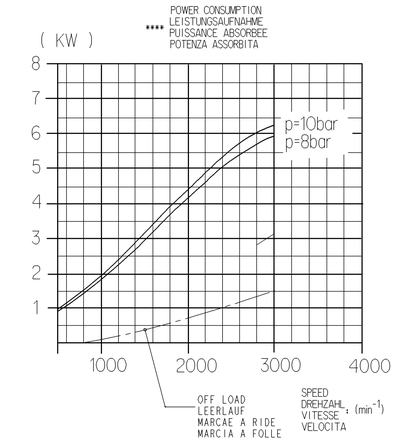

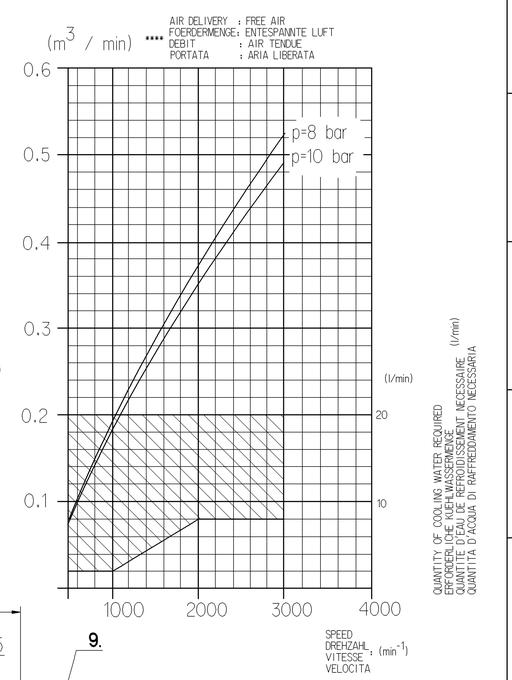

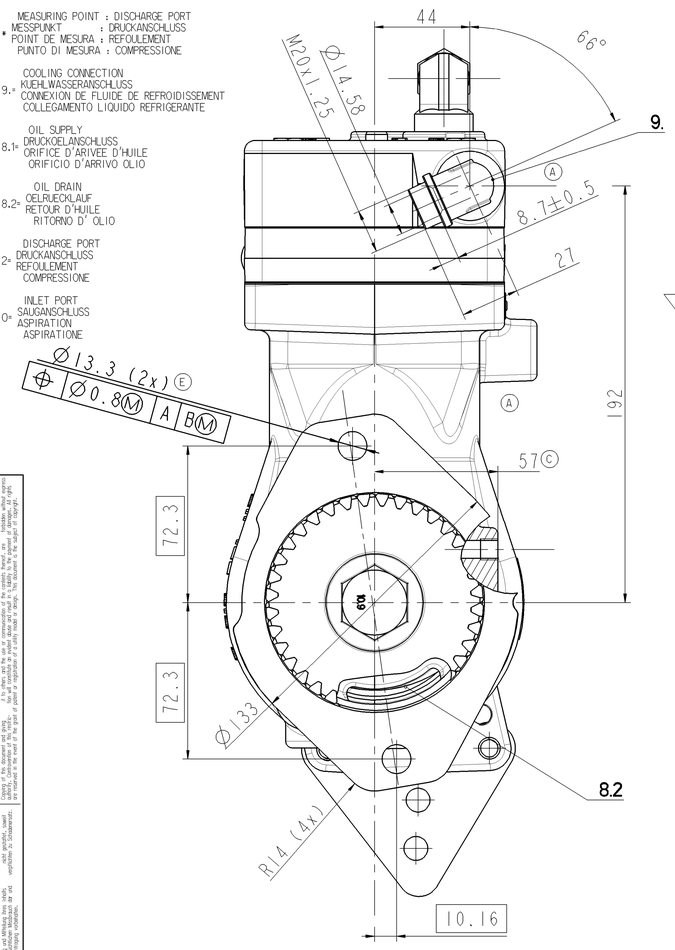

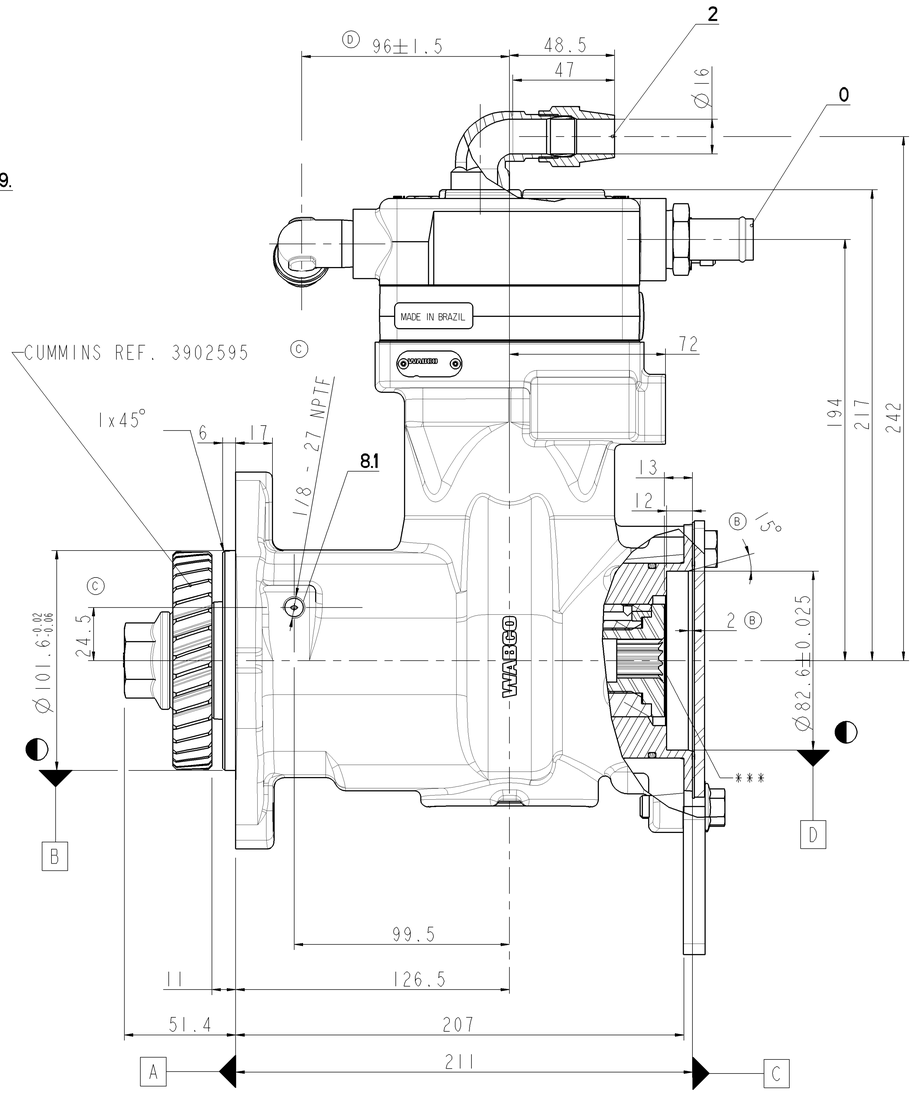

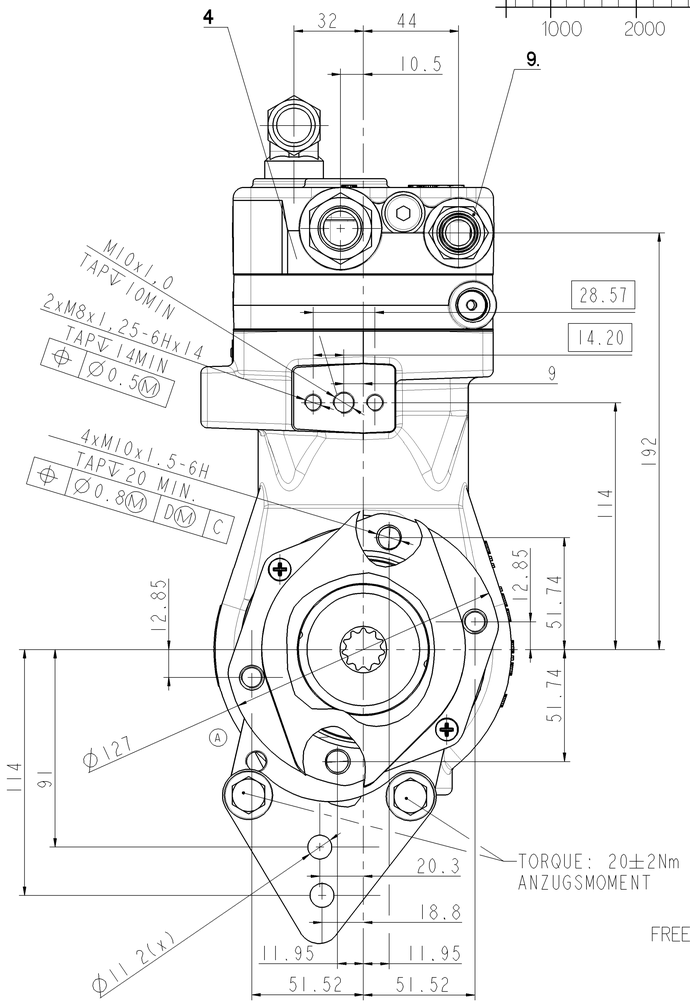

FREE FROM ASBESTOS

THIRD ANGLE PROJECTION

087895	1a E	2005-12-01	
DCN-No.	Rev.	Date	
State of Revision			

General Specifications: JED-334-0
Further Technical Data:
Doc. Code: Sheet: To
General Tolerances JED-261

Class	11	Range of Nominal Dimensions (± mm)				
		≥ 0	> 50 ≤ 180	> 180 ≤ 400	> 400	
Fine		0.5	1.0	1.5	2.0	
Medium	X	1.0	2.0	3.0	4.0	±3°
Coarse		2.0	3.5	5.0	6.5	

Tapped Holes acc. JED-686, JED-152
11 Tolerance Class Applied Crossmarked

Copyright WABCO *

Date	Drawn	Signature
2003-01-29	M.Hofori	
Checked		
2003-01-29	C.S.Wafanabe	
Expert		
Hodzel		

WABCO

SINGLE CYLINDER COMPRESSOR
EINZYLINDERKOMPRESSOR
COMPRESSEUR MONOCYLINDRIQUE
COMPRESSORE MONOCILINDRICO

Mass	Scale	Material No.	WABCO Id. No.: 911155120
18 kg	1:1	911 155 512 0	Doc.Code: 605 / Language: en/de/fr/it / Sheet: 1/1
Size	TRI		
A 0	510		

Function Code	CAD System	Prod.Type	Replacement for
-	Pro/E	0 2 X	884 503 371 0

100mm

The present document is the property of WABCO and may not be copied or made available to third parties without prior written approval. Subject to technical modifications. Alle Rechte bei der WABCO GmbH, auch für den Fall von Schutzrechtsanmeldungen. Weitergabe sowie Vervielfältigung dieser Unterlage, Verwertung und Mitteilung ihres Inhalts nicht gestattet soweit nicht ausdrücklich zugestanden. Zuwiderhandlungen verpflichten zu Schadenersatz. Alle Rechte für den Fall der Patenterteilung oder Gebrauchsmustereintragung vorbehalten.

Copies of this document may only be made with the express consent of WABCO. Contents must not be made available to third parties or used for purposes for which they are not intended. Infringements will be prosecuted. All rights are reserved in the event of the grant of patent or registration of a utility model or design. This document is the subject of copyright.

Ceci le présent document est la propriété de WABCO et ne doit ni être reproduit ni être mis à la disposition de tiers sans son accord. Sous réserve de modifications techniques. Tous droits réservés en cas de dépôt de brevet ou d'enregistrement d'un modèle d'utilité ou d'un dessin ou modèle. Ce document est la propriété intellectuelle de WABCO.

Questo documento è proprietà della WABCO e non può essere messo a disposizione di terzi o usato per scopi non previsti senza il nostro consenso. Sono riservate le modifiche tecniche. Tutti i diritti sono riservati in caso di deposito di brevetto o di registrazione di un modello di utilità o di un disegno o modello. Questo documento è proprietà della WABCO.