TECHNICAL DATA
TECHNISCHE DATEN
CARACTERISTIQUES TECHNIQUES
CARATTERISTICHE TECHNICHE

BORE: BOHRUNG: ALESAGE: ALESAGGIO:	Ø85 mm
STROCKE: HUB: COURSE: CORSA:	56 mm
SWEPT VOLUME: HUBRAUM: CYLINDREE: CYLINDRATA:	318 cc
MAX. WORKING SPEED: MAX. BETRIEBSDREHZAHL: VITESSE D'UTILISATION MAXI: VELOCITA DI ESERCIZIO MAX.:	n_{max}= 3000 min^{-1}
OVERSPEED (TEMPORARY MAX. 4 SEC.) : UEBERDREHZAHL (KURZZEITIG MAX. 4 SEC.) : SURVITESSE (DE COURTE DUREE MAXI. 4 SEC.) : SOVRAVELOCITA (BREVE TEMPO SOLO MAX. 4 SEC.) :	n_{ue}=1.3 X n_{max}
MAX. WORKING PRESSURE: MAX. BETRIEBSDRUCK : PRESSION D'UTILISATION MAXI. : PRESSIONE DI ESERCITIO MAX. :	p=10 bar **
MAX PRESSURE (TEMPORARILY ∠= 4 SEC.) : HOECHSTDRUCK (KURZZEITIG ∠= 4 SEC.) : PRESSION MAXI. (DE COURTE DUREE ∠= 4 SEC.) : PRESSIONE MASSIMA (BREVE TEMPO SOLO ∠= 4 SEC.) :	p=14 bar **
END PLAY OF CRANKSHAFT: AXIALSPIEL DER KURBELWELLE: JEU AXIAL DU VILEBRQUIN: GIOCO ASSIALE DELL 'ALBERO A GOMITO:	0.08...0.38 mm

MAX. PERMISSIBLE TILT DURING CONTINUOUS WORKING
MAX. ZULAESSIGE NEIGUNG IM DAUERBETRIEB
NCLINAISION MAX. ADMISE EN SERVICE CONTINU
MASSIMA INCLINAZIONE AMMESSA IN CASO DI SERVIZIO CONTINUO

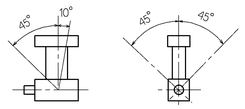

** MEASURING POINT : DISCHARGE PORT
MESSPUNKT : DRUCKANSCHLUSS
POINT DE MESURE : REFOULEMENT
PUNTO DI MESURA : COMPRESSIONE

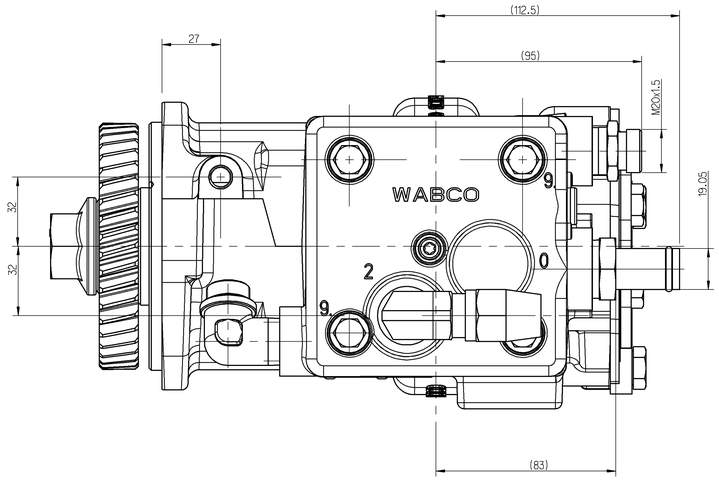

**** DIAGRAM FOR NATURALLY ASPIRATED COMPRESSOR ONLY
DIAGRAMM NUR FUER NICHTAUFGELADENEN KOMPRESSOR

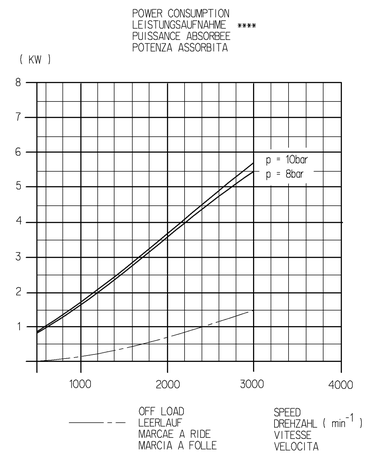

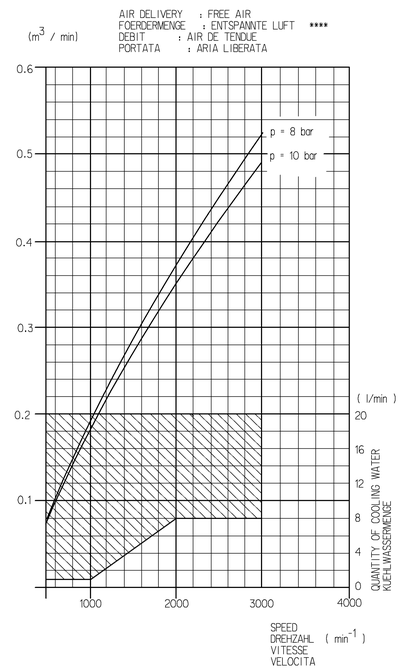

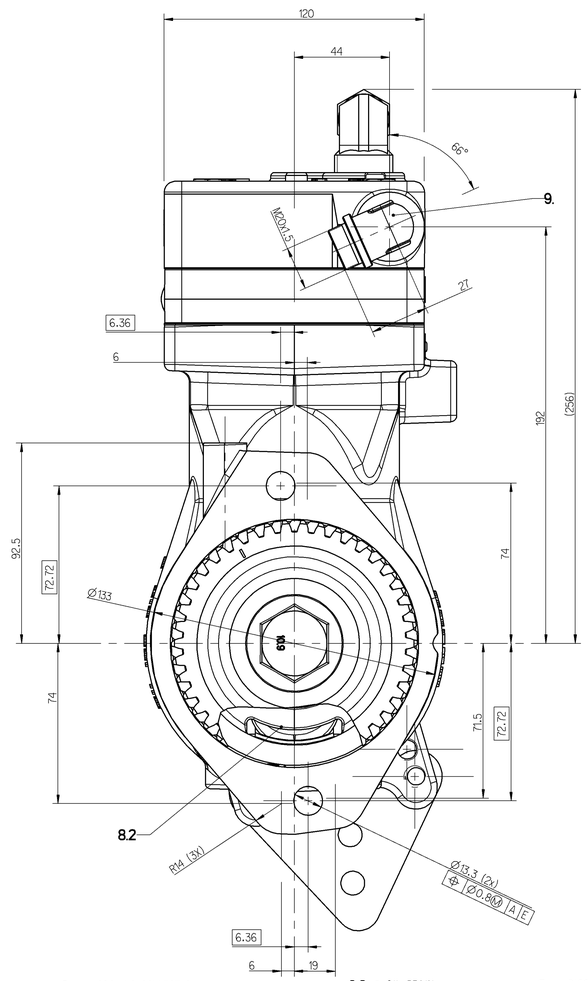

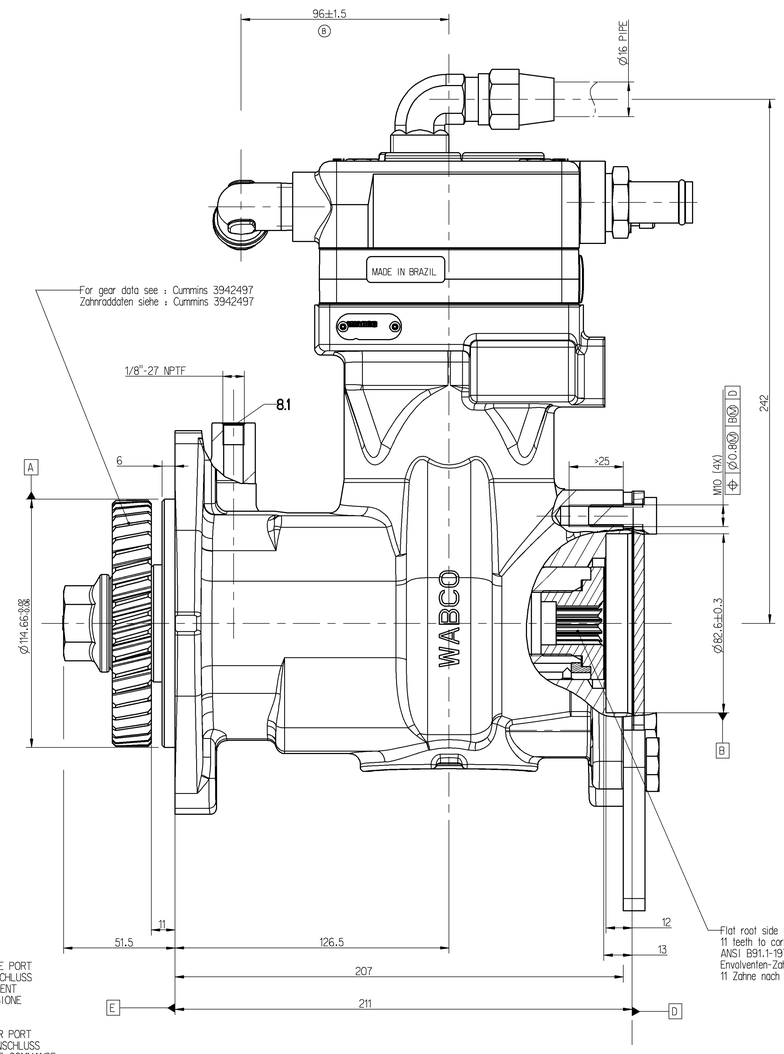

Flat root side fit spline 16/32
11 teeth to correspond with
ANSI B91.1-1970, class 5
Envolventen-Zahnwellerprofil 16/32
11 Zahne nach ANSI B92.1-1970, Klasse 5

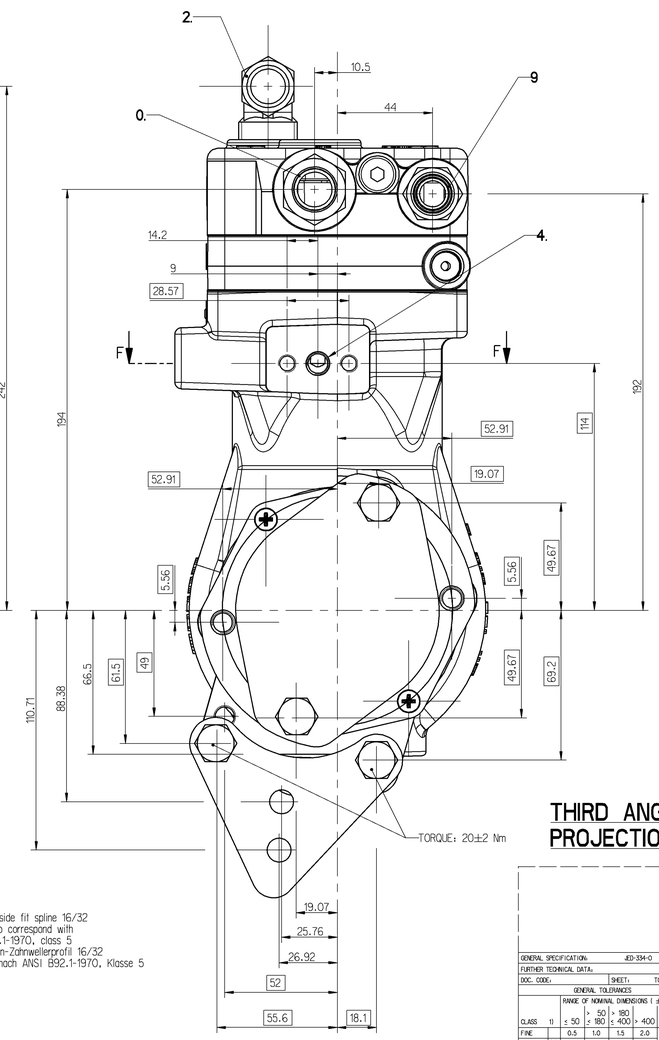

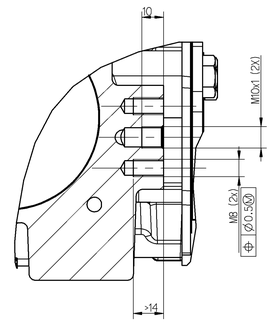

F-F

FOR THE APPLICATION OF THIS DEVICE
PLEASE SEE PRODUCT SPECIFICATION 435/911 153 510 0

THIRD ANGLE PROJECTION

9. : COOLING CONNECTION
KUEHLWASSERANSCHLUSS
CONNEXION DE FLUIDE DE REFROIDISSEMENT
COLLEGAMENTO LIQUIDO REFRIGERANTE

8.1 : OIL SUPPLY
DRUCKOELANSCHLUSS
ORIFICE D'ARRIVEE D'HUILE
ORIFICIO D ARRIVO OLIO

8.2 : OIL DRAIN
OELRUECKLAUF
RETOUR D'HUILE
RITORNO OLIO

0 : INLET PORT
SAUGANSCHLUSS
ASPIRATION
ASPIRATIONE

2 : DISCHARGE PORT
DRUCKANSCHLUSS
REFOULEMENT
COMPRESSIONE

4 : GOVERNOR PORT
STEUERANSCHLUSS
RIFICE DE COMMANDE
ORIFICIO DI COMMANDO

GENERAL SPECIFICATION: JED-334-0																							
FURTHER TECHNICAL DATA:																							
DOC. CODE:																							
GENERAL TOLERANCES																							
RANGE OF NOMINAL DIMENSIONS (± mm)																							
CLASS	1)	≤ 50	> 50 ≤ 180	> 180 ≤ 400	> 400																		
FINE		0.5	1.0	1.5	2.0																		
MEDIUM	X	1.0	2.0	3.0	4.0	±3°																	
COARSE		2.0	3.5	5.0	6.5																		
TAPPED HOLES ACC. ISO 4029 / JED-152																							
1) TOLERANCE CLASS APPLIED CROSSMARKED																							

DON'NO.	REV.	DATE
087816	to B	04-08-13
087813	to B	04-07-21

Pro/ENGINEER DRAWING
COPYRIGHT
DATE | SIGNATURE
DRAWN: 03-04-25 M.Hattori
CHECKED: 03-04-25 C.S.Watanabe
EXPORT CODE: 6 3 5

MASS	SCALE	PRODUCT IDENTIFICATION NO.	DOC. CODE	SHEET
18 KG	1:1	911 155 514 0	605	1/1

SIZE	TRI	FUNCTION CODE	SHAPE CODE	PRODUCT TYPE	REPLACEMENT FOR
A 0	510			-	884 503 411 0

WABCO
SINGLE CYLINDER COMPRESSOR
EINZYLINDERKOMPRESSOR
COMPRESSEUR MONOCYLINDRIQUE
COMPRESSORE MONOCILINDRICO

DIESE ZEICHNUNG UND ALLE DARIN ENTHALTENEN ANGABEN SIND DAS EIGENTUM DER WABCO GMBH. VERVIELFALTIGUNG UND WEITERGABE AN DRITTE OHNE UNSERE ZUSTIMMUNG IST UNZULAESSIG. ZUWIDERHANDLUNGEN VERPFLICHTEN ZUM SCHADENSERSATZ. ALL RIGHTS RESERVED. COPYRIGHT WABCO GMBH. REPRODUCTION AND DISTRIBUTION OF THIS DOCUMENT OR EXTRACTS THEREOF WITHOUT OUR CONSENT IS PROHIBITED. OFFENDERS WILL BE HELD LIABLE FOR DAMAGES. CE DOCUMENT ET LES DONNEES QUI Y SONT CONTENUES SONT LA PROPRIETE DE WABCO GMBH. LA REPRODUCTION ET LA DIFFUSION DE CE DOCUMENT OU DE SES EXTRAITS SANS NOTRE CONSENTEMENT SONT INTERDITES. LES CONTREVENANTS SERONT TENUS DE DEDOMMAGER. QUESTO DISEGNO E TUTTE LE INDICAZIONI CONTENUTE SONO PROPRIETA DI WABCO GMBH. LA RIPRODUZIONE E LA DISTRIBUZIONE DI QUESTO DOCUMENTO O DI PARTI DI ESSO SENZA LA NOSTRA AUTORIZZAZIONE SONO VIETATE. I TRASGRESSORI SARANNO TENUTI AL RISARCIMENTO DEI DANNI.

Dwg. - 9115155140 - 605 -
M - 9115155140 - A02