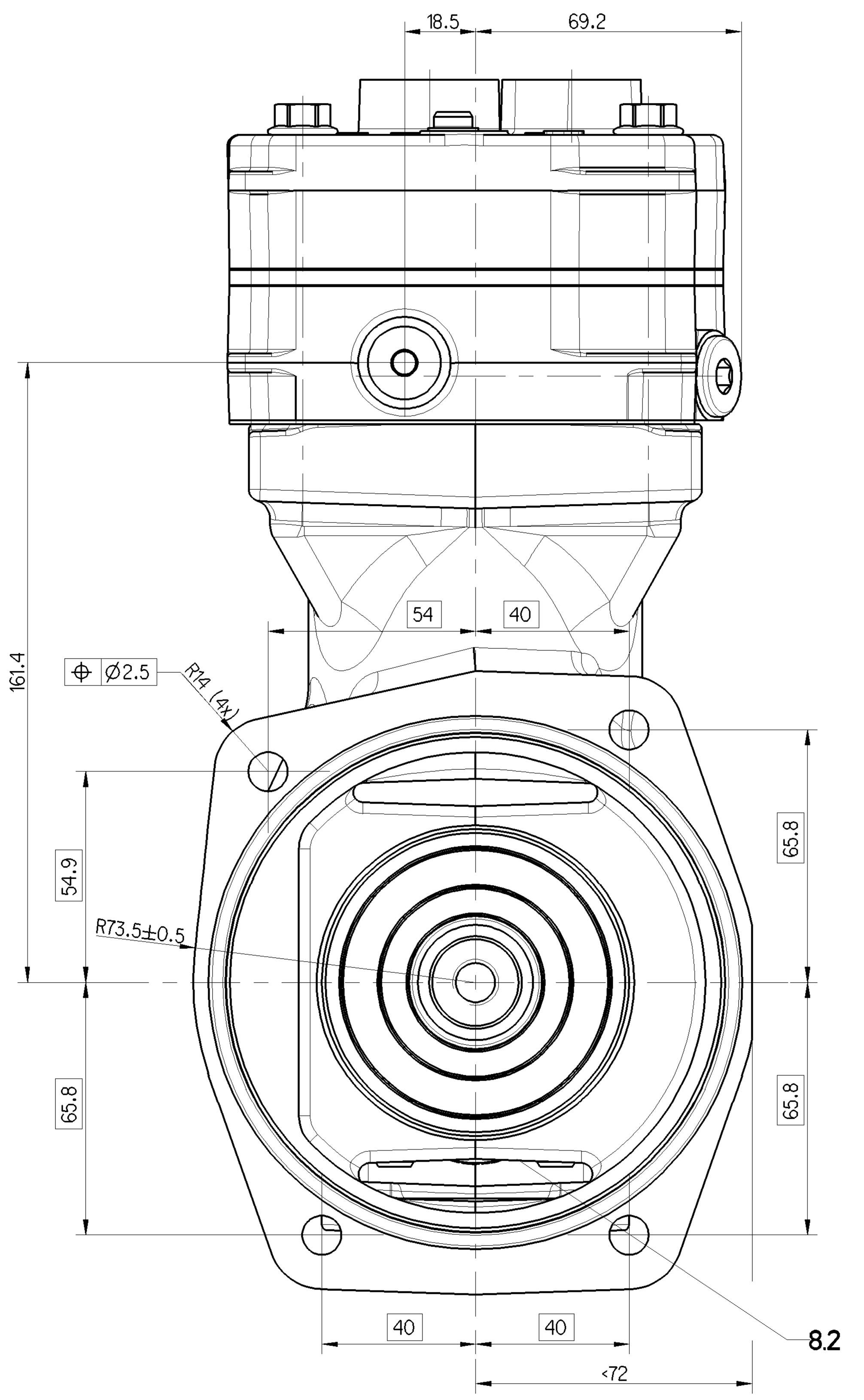

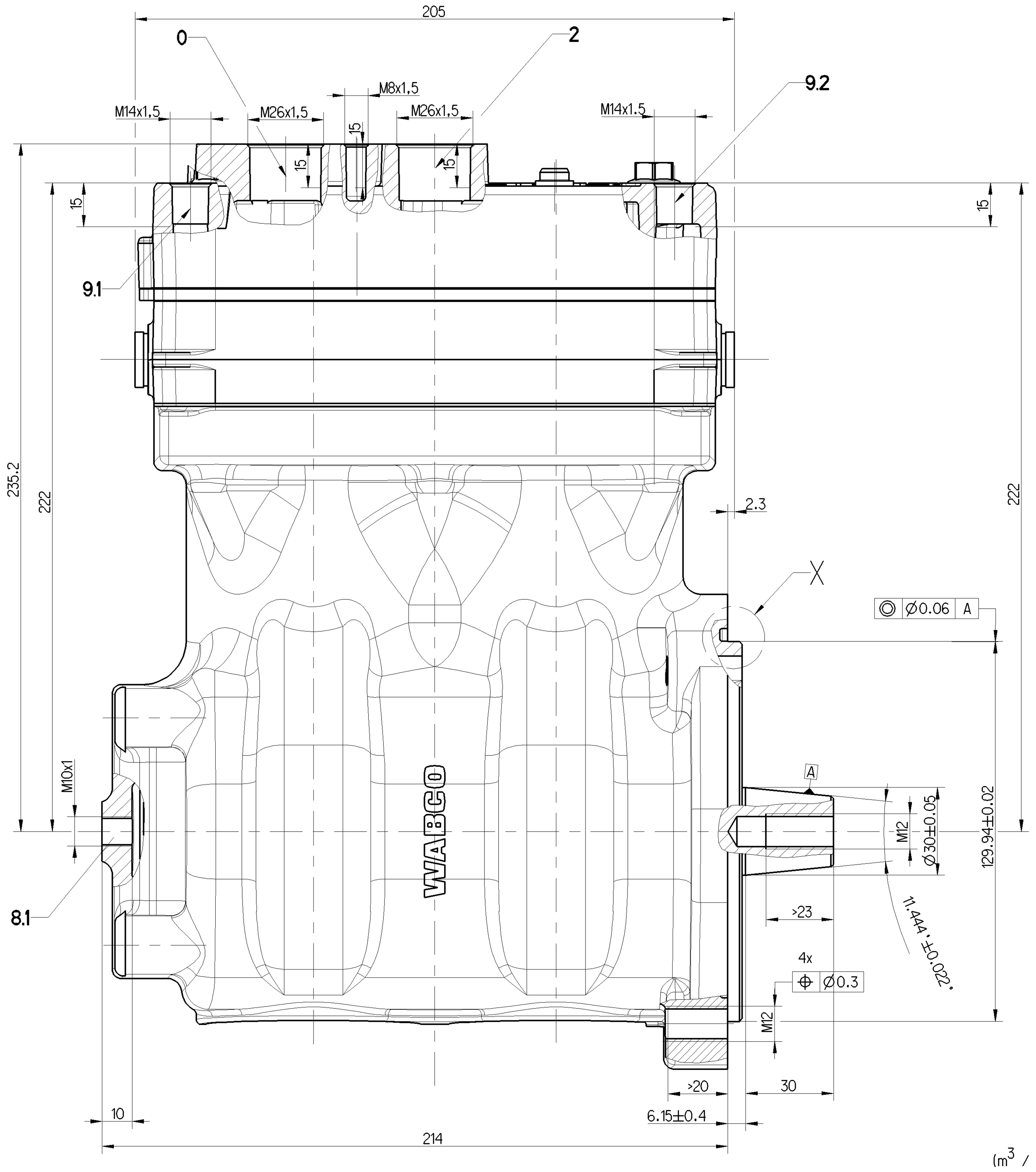

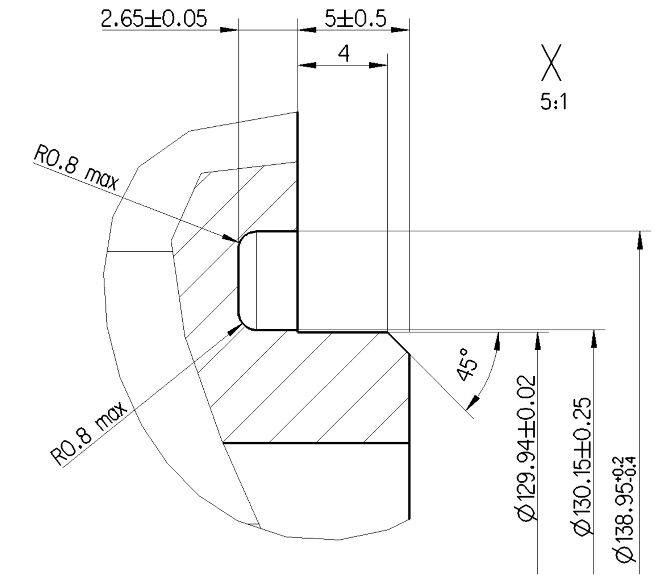

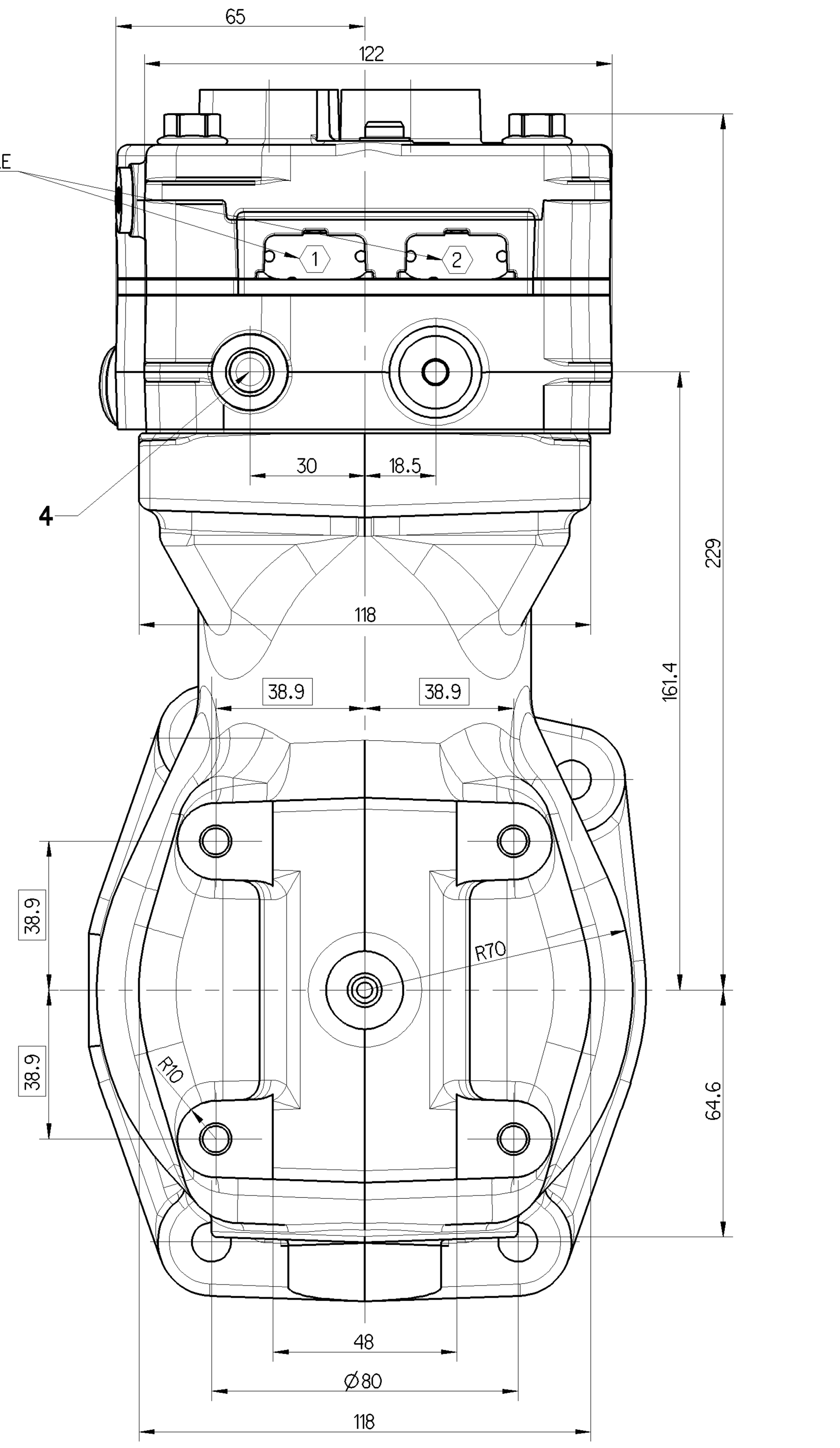

0	SUCTION PORT	M <= 100 Nm
2	DISCHARGE PORT	M <= 100 Nm
4	GOVERNOR PORT	M <= 25 Nm
8.1	OIL SUPPLY	M <= 25 Nm
8.2	OIL DRAIN	
9.1 9.2	COOLANT CONNECTION	M <= 35 Nm

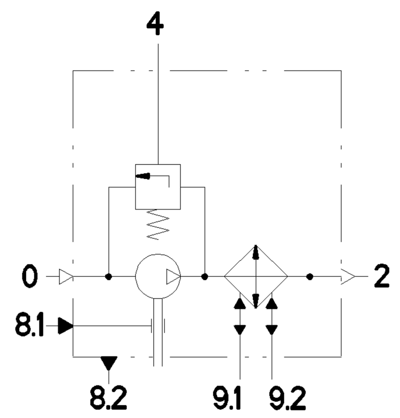

BORE	Ø 75 mm
STROKE	50 mm
SWEPT VOLUME	442 cm^3
MAX. WORKING SPEED	n_{max} = 3000 min^{-1}
OVERSPEED (MAX. 4 SEC.)	n_{ue} = 1.3 x n_{max}
END PLAY OF CRANKSHAFT	0.05 ... 0.40
MAX. WORKING PRESSURE	12.5 bar ⟨3⟩
TOP PRESSURE (MAX. 4 SEC)	16 bar ⟨3⟩
OPENING PRESSURE SAFTY VALVE	21±3 bar
MAX PERMISSIBLE DISCHARGE PORT TEMP. IN SERVICE	220°C
LUBRICATION SUPPLIED FROM ENGINE	
FREE FROM ASBESTOS	

⟨3⟩ MEASURE AT DISCHARGE PORT

MAX. PERMISSIBLE TILT DURING CONTINOUS WORKING

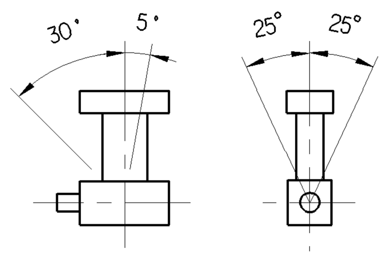

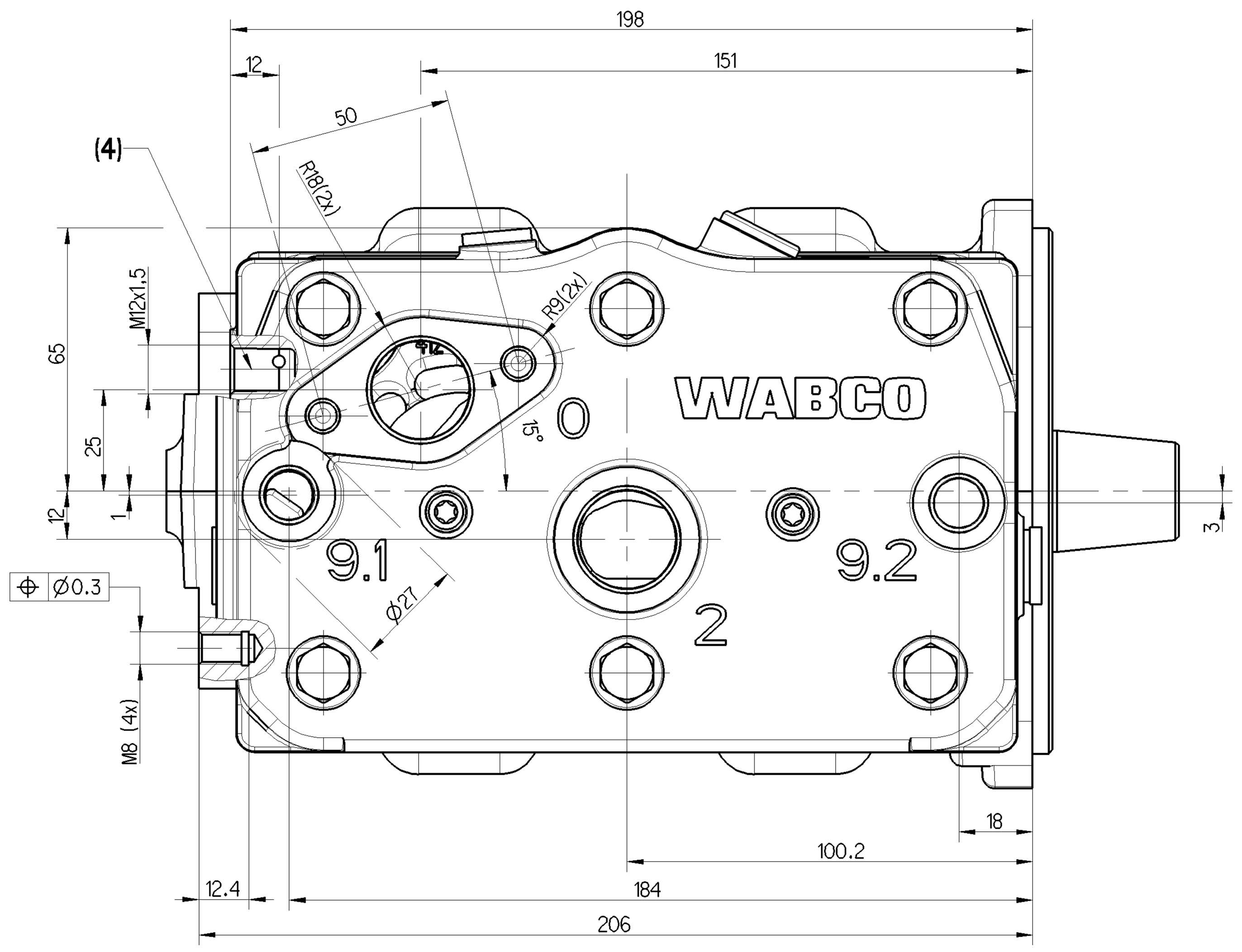

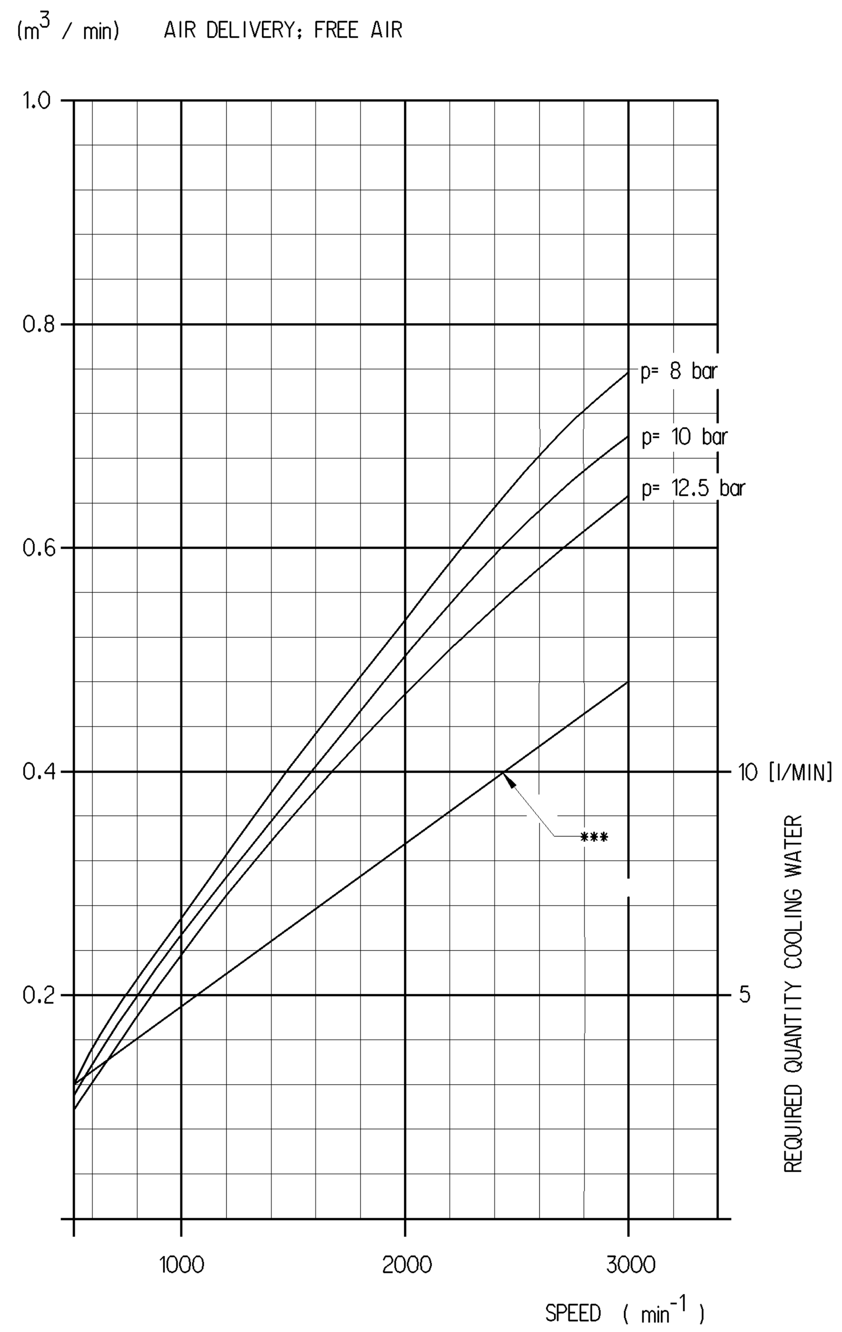

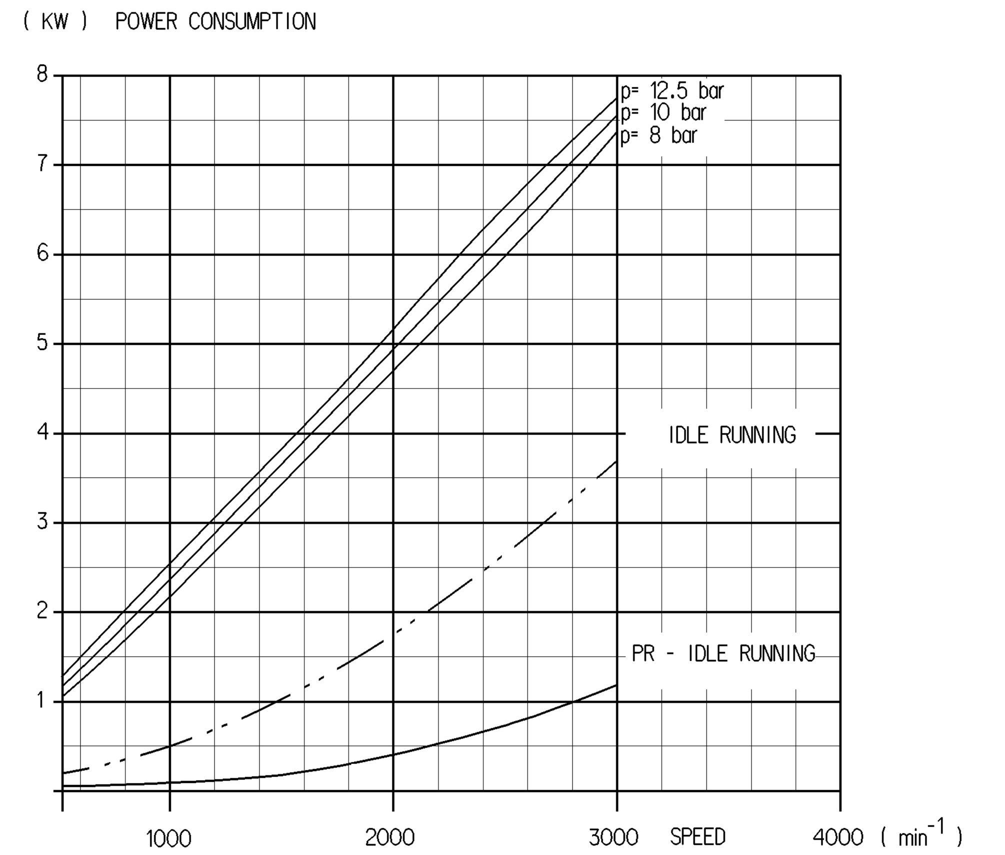

(...) AUXILIARY DIMENSION

** ALSO VALID FOR PRI: 037, 003, 105, 008.

LABELING INFORMATION TABLE (SEE ALSO DOC. 922)

PRODUCTION SITE	LABEL	LABEL ID NUMBER	LABEL LAYOUT
PRI 048 **	⟨1⟩	899 050 145 4	PRODUCTION DATE / WABCO ID NR
	⟨2⟩	NAME PLATE NOT APLICABLE	

General Specification: JED-334-1 , Size ISO 14405 LP
Further Technical Data: 911 504 506 0
Doc. Code: 035 Sheet: 1 To 5
General Tolerances JED-261

Class 1)		≤ 50	> 50 ≤ 180	> 180 ≤ 400	> 400	
Fine	X	0.5	1.0	1.5	2.0	±3°
Medium		1.0	2.0	3.0	4.0	
Coarse		2.0	3.5	5.0	6.5	

Tapped Holes acc.
1) Tolerance Class Applied Crossmarked

Copyright WABCO®

Date	Signature
Drawn	
2017-01-03	Trokajlo
Checked	
2017-01-04	Slobodzian
Expert	
	Plonski

WABCO

TWIN CYLINDER COMPRESSOR

Mass	Scale	Material No.	Date of first issue:	2017-01-04	
13.679 KG	1:1	911 504 506 R	Doc.Code 005	Language EN	Sheet 1/1
Size A 0	CAD System CREO	ECN-No. -	Revision -	Techn. Resp. 2009	Replacement for /

Toute Communication ou reproduction de ce document, toute exploitation ou communication de son contenu sont interdites, sauf autorisation expresse. Tout manquement à cette règle constitue un abus évident et expose son auteur au versement de dommages et intérêts. Tous droits de propriété industrielle réservés, notamment en matière de brevets et de modèles.
Weitergabe sowie Vervielfältigung dieser Unterlage, Verwertung und Mitteilung ihres Inhalts nicht gestattet, soweit nicht ausdrücklich zugestanden. Zuwiderhandlungen stellen einen offensichtlichen Missbrauch dar und verpflichten zu Schadenersatz. Alle Rechte für den Fall der Patenterteilung oder Gebrauchsmuster-Eintragung vorbehalten.
Non è permesso consegnare a terzi o riprodurre questo documento, nè utilizzarne il contenuto o renderlo comunque noto a terzi senza autorizzazione esplicita. Ogni infrazione costituirà un evidente abuso e comporterà il risarcimento dei danni subiti. E'fatta riserva di tutti i diritti derivanti da brevetti o modelli.
Copying of this document and giving it to others and the use or communication of the contents thereof, are forbidden without express authority. Contravention of this restriction will constitute an evident abuse and result in a liability to the payment of damages. All rights are reserved in the event of the grant of patent or registration of a utility model or design. This document is the subject of copyright.