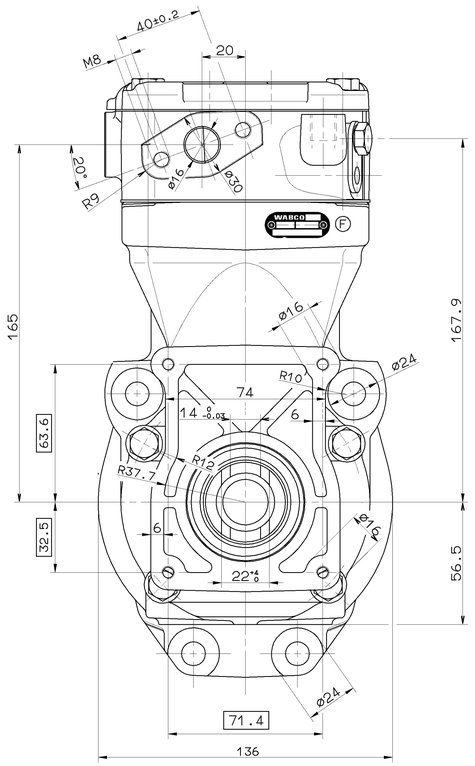

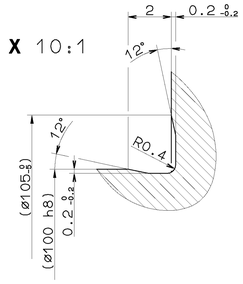

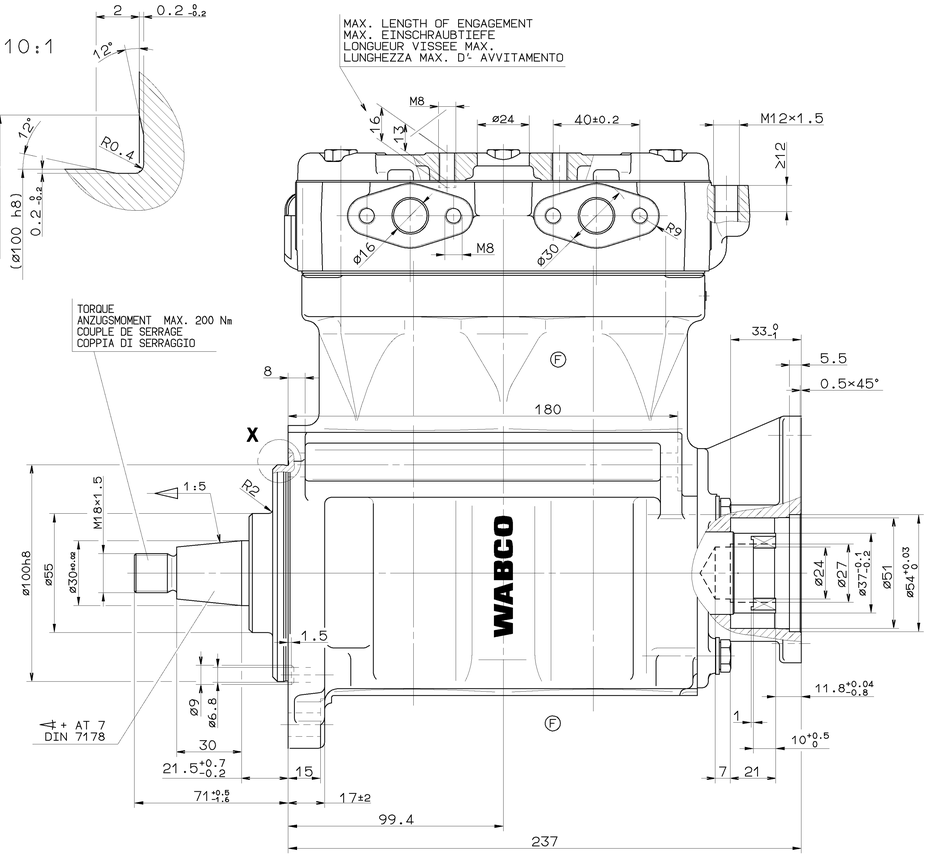

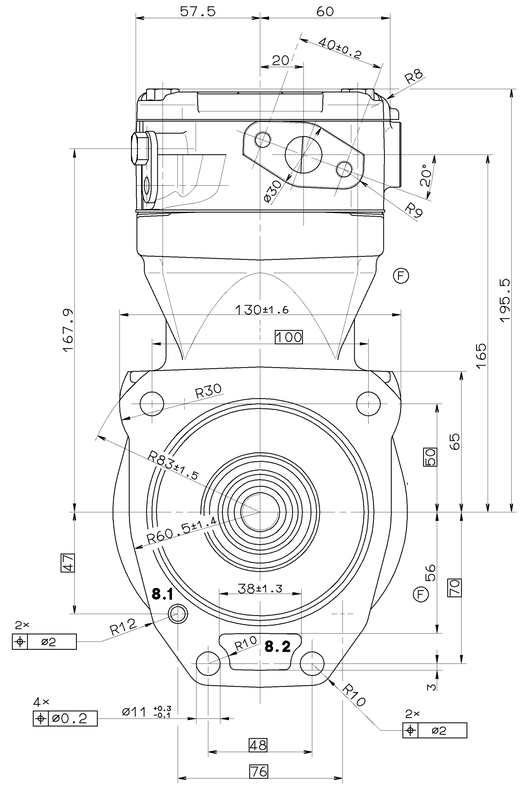

TECHNICAL DATA
TECHNISCHE DATEN
CARACTERISTIQUES TECHNIQUES
CARATTERISTICHE TECNICHE

BORE: BOHRUNG: ALESAGE: ALESAGGIO:	ø75 mm
STROKE: HUB: COURSE: CORSA:	50 mm
SWEPT VOLUME: HUBRAUM: CYLINDREE: CYLINDRATA:	440 cm^3
MAX.WORKING SPEED: MAX.BETRIEBSDREHZAHL: VITESSE D'UTILISATION MAXI.: VELOCITA DI ESERCIZIO MAX.:	n_{max}= 3000 $^1/_{min}$
OVERSPEED(TEMPORARY MAX. 4 SEC.): UEBERDREHZAHL(KURZZEITIG MAX. 4 SEC.): SURVITESSE(DE'COURTE DUREE MAXI. 4 SEC.): SOVRAVELOCITA(BREVE TEMPO SOLO MAX.4 SEC.):	n_{ue}= 1.3 x n_{max}.
MAX.WORKING PRESSURE: MAX.BETRIEBSDRUCK: PRESSION D'UTILISATION MAXI.: PRESSIONE DI ESERCIZIO MAX.:	p_a=12.5 bar **
MAX. PRESSURE (TEMPORARILY): HOECHSTDRUCK (KURZZEITIG): PRESSION MAXI. (DE COURTE DUREE): PRESSIONE MASSIMA (BREVE TEMPO SOLO):	p_e=14 bar **

LUBRICATION: LUBRICATION SUPPLIED FROM ENGINE
SCHMIERART: UMLAUFSCHMIERUNG MIT DRUCKOELANSCHLUSS (UD)
GRAISSAGE: GRAISSAGE PAR CIRCULATION ALIMENTATION PAR LE MOTEUR
LUBRIFICAZIONE: LUBRIFICAZIONE A CIRCOLAZIONE ALIMENTAZIONE DAL MOTORE

REQUIRED QUANTITY OF COOLING WATER
ERFORDERLICHE KUEHLWASSERMENGE
QUANTITE D'EAU NECESSAIRE
QUANTITA D'AQUA NECESSARIA
≥ 6 l/min *

MAX. PERMISSIBLE TILT DURING CONTINUOUS WORKING:
MAX. ZULAESSIGE NEIGUNG IM DAUERBETRIEB:
INCLINAISON MAX. ADMISE EN.SERVICE CONTINU:
MASSIMA INCLINAZIONE AMMESSA IN CASO DI SERVIZIO CONTINUO:

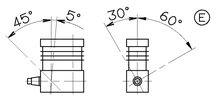

END PLAY OF CRANKSHAFT: 0.08...0.38 mm
AXIALSPIEL DER KURBELWELLE:
JEU AXIAL DU VILEBREQUIN:
GIOCO ASSIALE DELL'ALBERO A GOMITO:

MAX. PERMISSIBLE PRESSURE PORT TEMPERATURE IN SERVICE 220 °C
* MAX. ZULAESSIGE DRUCKSTUTZENTEMPERATUR WAEHREND DES FAHRBETRIEBES
TEMPERATURE) MAX. ADMISSIBLE EN SERVICE
TEMPERATURA MAX. AMMISSIBLE IN SERVIZIO

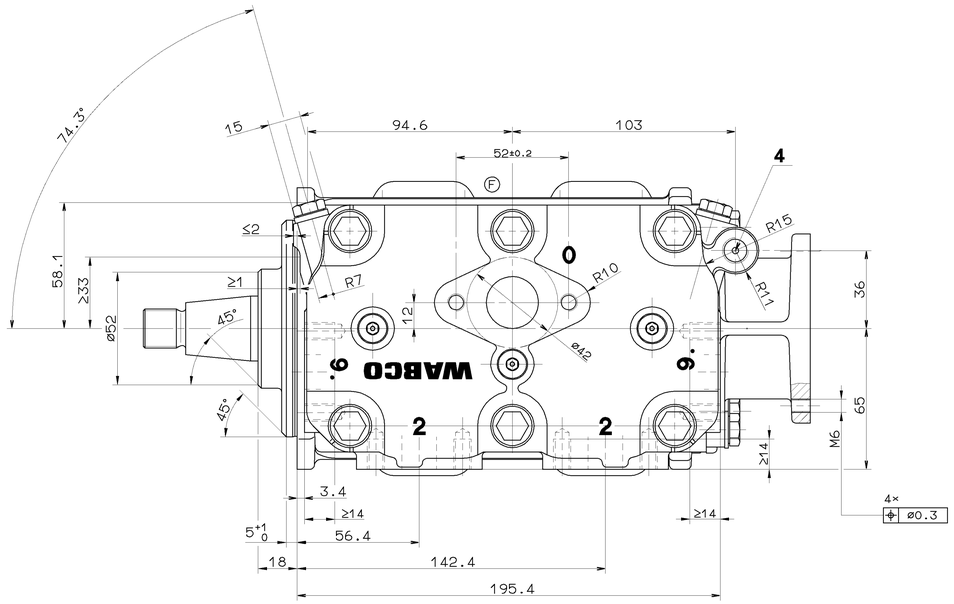

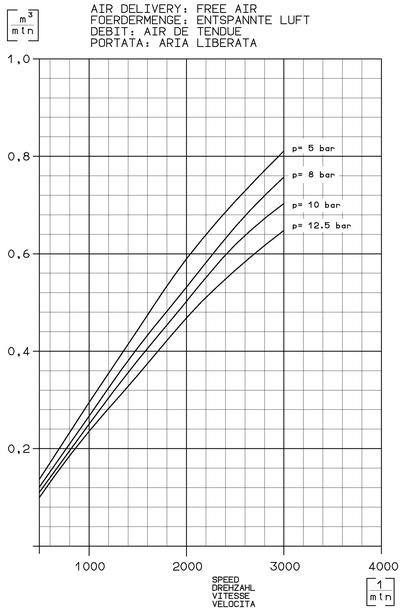

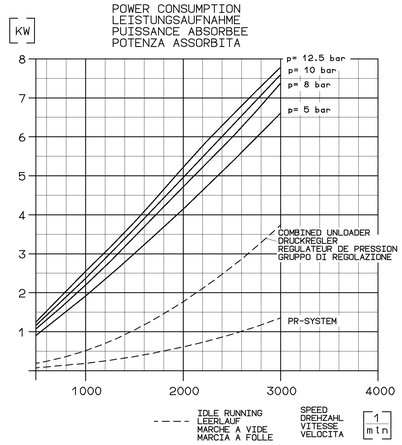

** MEASURING POINT : DISCHARGE PORT
MESSPUNKT : DRUCKANSCHLUSS
POINT DE MESURE : REFOULEMENT
PUNTO DI MISURA : COMPRESSIONE

FREE FROM ASBESTOS
ASBESTFREI
EXEMPT D'AMIANTE
ESENTE D'AMIANTO

0 = INLET PORT
SAUGANSCHLUSS
ASPIRATION
ASPIRAZIONE

2 = DISCHARGE PORT
DRUCKANSCHLUSS
REFOULEMENT
COMPRESSIONE

4 = GOVERNOR PORT
GOVERNOR-ANSCHLUSS
ORIFICE DE COMMANDE
ORIFIZIO DI COMMANDO

9 = COOLANT CONNECTION
KUEHLMITTELANSCHLUSS
CONNEXION DE FLUIDE DE REFROIDISSEMENT
COLLEGAMENTO LIQUIDO REFRIGERANTE

8. 1 = OIL SUPPLY
DRUCKOELANSCHLUSS
ORIFICE D'ARRIVEE D'HUILE
ORIFIZIO D ARRIVO OLIO

8. 2 = OIL DRAIN
OELRUECKLAUF
RETOUR D'HUILE
RITORNO OLIO

GENERAL SPECIFICATION: JED-334			
FURTHER TECHNICAL DATA:			
DOC. CODE: SHEET: TO			
GENERAL TOLERANCES			
CLASS 1)	RANGE OF NOMINAL DIMENSIONS [in mm] ≤50	>50 ≤180	>180 ≤400	>400
FINE	X	0,5	1,0	1,5	2,0
MEDIUM		1,0	2,0	3,0	4,0
COARSE		2,0	3,5	5,0	6,5
TAPPED HOLES ACC. ISO 4029 / JED-159					
1) TOLERANCE CLASS APPLIED CROSSHATCHED					

DCN-NO.	REV.	DATE
053498	6×F	95-11-28
053481	1×E	95-08-30
053472	3×D	95-05-02
053445	2×C	94-09-07
049300	4×B	94-02-07
049283	1×A	93-09-23

CHECKED-CONFIRMED COPYRIGHT		
DATE	SIGNATURE	
93-06-25	BRUNS	
DRAWN: 93-06-25	KRAMER	
CHECKED: 93-06-25	PANTZER	
STANDARDIZATION:		
MASS: 15.5 kg	SCALE: 1:1	
SIZE: A 0	F.A.I.: 140	

WABCO

TWIN ZYLINDER COMPRESSOR
ZWEIZYLINDER KOMPRESSOR
COMPRESSEUR BICYLINDRIQUE
COMPRESSORE BICILINDRICO

PRODUCT IDENTIFICATION NO.: 911 506 501 0

DOC. CODE: 605 SHEET: 1/1

SHAPE CODE:

REPLACEMENT FOR: 884 007 766 0

100mm

EXPORT CODE 7 1 6

PRODUCT TYPE 0 0 X

1000/01/01/A 03

605-1003