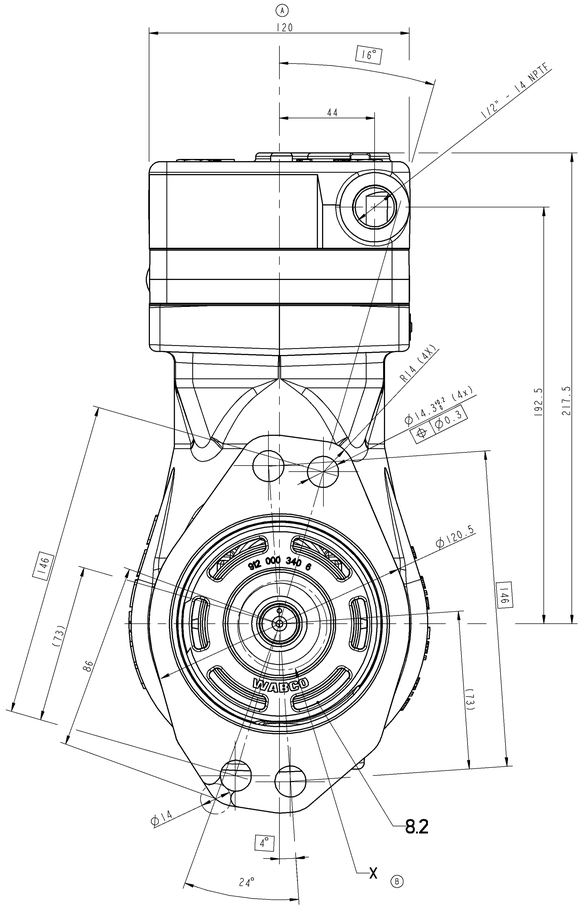

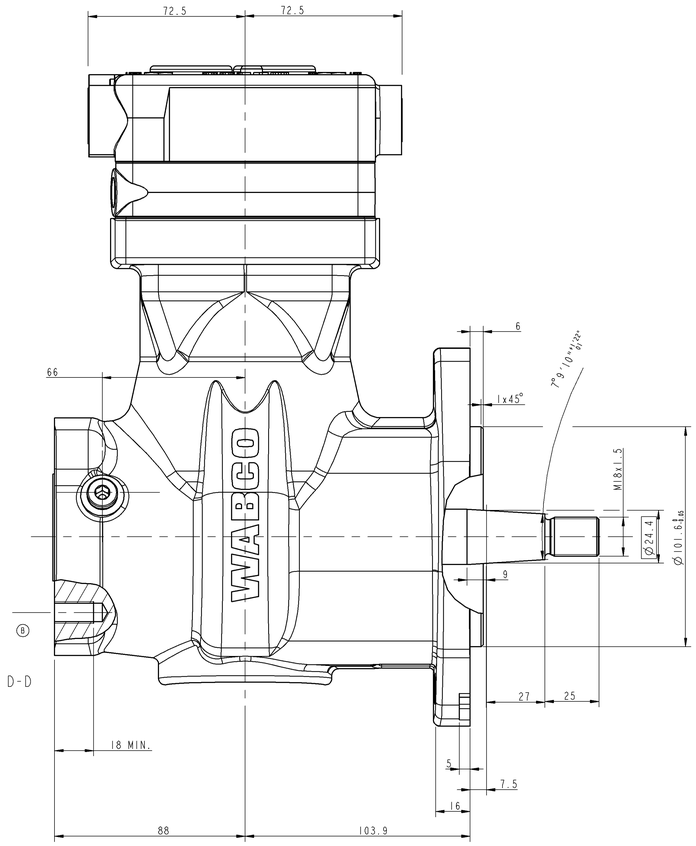

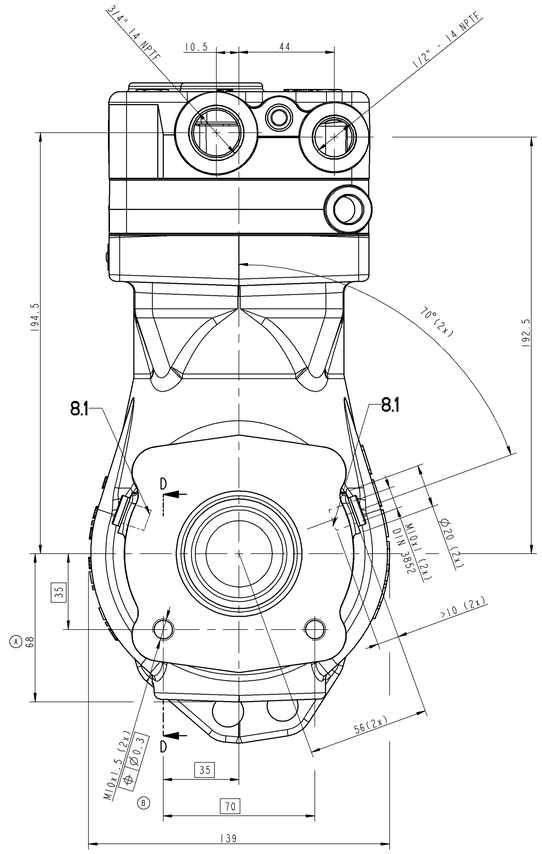

BORE:
BOHRUNG:
ALESAGE:
ALESAGGIO: Ø85 mm

STROKE:
HUB:
COURSE:
CORSA: 42 mm

SWEPT VOLUME:
HUBRAUM:
CYLINDREE:
CYLINDRATA: 238 cm^3

MAX. WORKING SPEED:
MAX. BETRIEBSDREHZAHL:
VITESSE D'UTILISATION MAXI.:
VELOCITA DI ESERCIZIO MAX.: n_{max} = 3000 1/min

OVERSPEED
UEBERDREHZAHL (KURZZEITIG MAX. 4 SEC.)
SURVITESSE (DE'COURTE DUREE MAXI. 4 SEC):
SOVRAVELOCITA (BREVE TEMPO SOLO MAX. 4 SEC.): n_{ue} = 1.3 x n_{max}

MAX. WORKING PRESSURE:
MAX. BETRIEBSDRUCK:
PRESSION D'UTILIZATION MAXI. :
PRESSIONE DI ESERCIZIO MAX. : pe=12bar

LUBRICATION: LUBRICATION SUPPLIED FROM ENGINE
SCHMIERART: UMLAUFSCHMIERUNG MIT DRUCKOELANCHLUSS (UD)
GRAISSAGE : GRAISSAGE PAR CIRCULATION ALIMENTATION PAR LE MOTEUR
LUBRIFICAZIONE : LUBRIFICAZIONE A CIRCULAZIONE ALIMENTAZIONE DAL MOTORE

WITH WATER - COOLING REQUIRED QUANTITY COOLING WATER:
BEI WASSERKUEHLUNG ERFORDERLICHE KUEHLWASSERMENGE:
AVEC REFROIDESSEMENT PAR EAU QUANTITE E'EAU NECESSAIRE:
CON REFREDDAMENTO AD ACQUA AUANTITA D'AQUA NECESSARIA: 6 l/min *

END PLAY OF CRANCSHAFT:
AXIALSPIEL DER KURBELWELLE:
JEU AXIAL DU VILEBREQUIN:
GIOCCO ASSIALE DELL'ABERO A GOMITO: 0.10 . . . 0.50 mm

MAX. PERMISSIBLE TILT DURING CONTINUOUS WORKING:
MAX. ZULAESSIGE NEIGUNG IM DAUERBETRIEB:
INCLINAISON MAX. ADMISE EN SERVICE CONTINU:
MASSIMA INCLINAZIONE AMMESSA IN CASO DI SERVIZIO CONTINUO:

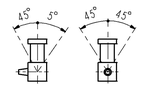

*) MAX. PERMISSIBLE PRESSURE TEMPERATURE IN SERVICE:
MAX. ZULAESSIGE DRUCKSTUTZENTEMPERATUR WAEHREND DES FAHRBETRIEBES: 220°C
TEMPERATURE MAX. ADMISSIBLE EN SERVICE:
TEMPERATURA MAX. AMMISSIBLE IN SERVIZIO:

9. COOLANT CONNECTION
KUEHLMITTELANCHLUSS M ≤ 60 Nm
CONNEXION DE FLUIDE DE REFROIDISSEMENT
COLLEGAMENTO LIQUIDO REFRIGERANTE

8.1 OIL SUPPLY
DRUCKOELANSCHLUSS
ORIFICE D'ARRIVE D'HUILE
ORIFIZIO D'ARRIVO OLIO

8.2 OIL DRAIN
OELRUECKLAUF
RETOUR D'HUILE
RITORNO OLIO

0 INLET PORT
SAUGANCHLUSS M ≤ 100 Nm
ASPIRATION
ASPIRATIONE

2 DISCHARGE PORT
DRUCKANSCHLUSS M ≤ 100 Nm
REFOULEMENT
COMPRESSIONE

(...) AUXILIARY DIMENSIONS
HILFMASS
DIMENSION AUXILIAIRE
DIMENSIONE AUSILIARIA

FOR THE APPLICATION OF THIS DEVICE PLEASE
SEE PRODUCT SPECIFICATION 435 / 912 125 000 0

Ⓐ NOTE: PRODUCT MUST MEET JOHN DEERE
CLEANLINESS CLASSIFICATION JDS-G169
CLEANLINESS CLASS 5.6

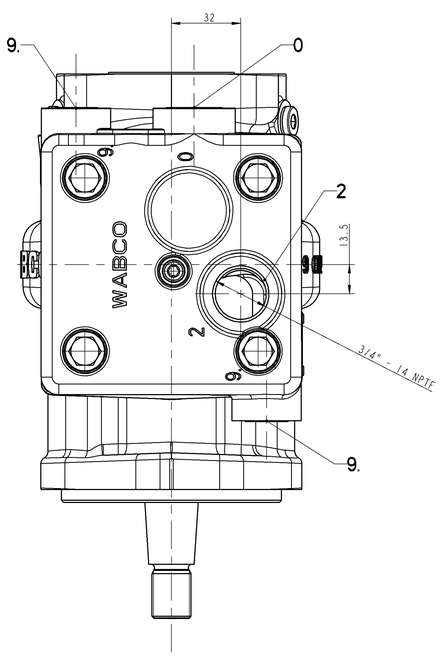

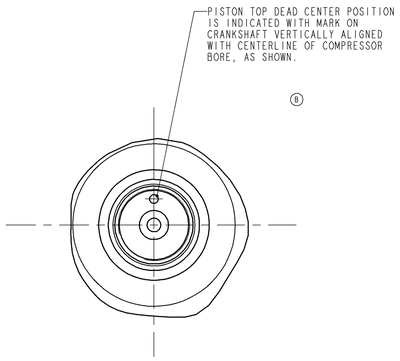

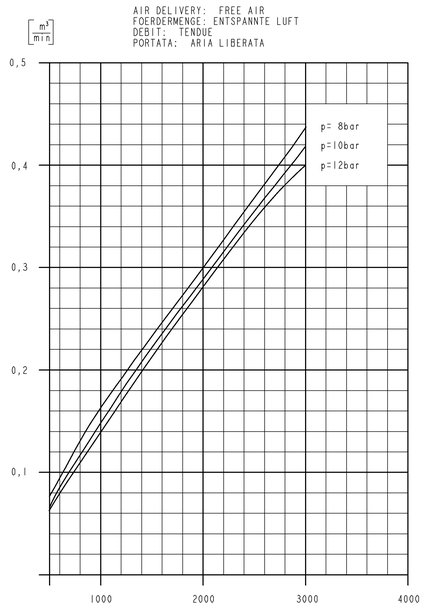

(KENNFELD NR. 009/92.02)

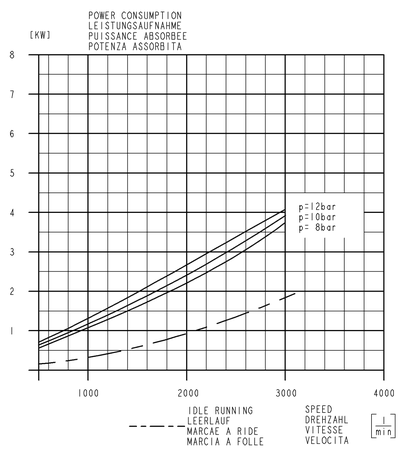

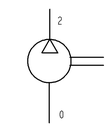

GENERAL SPECIFICATION: JED-334-0									Pro/ENGINEER DRAWING COPYRIGHT		WABCO		
FURTHER TECHNICAL DATA:									DATE	SIGNATURE			
DOC. CODE:				SHEET:	TO				DRAWN 02-10-18	M. Hoffari	SINGLE CYLINDER COMPRESSOR		
GENERAL TOLERANCES									CHECKED 02-10-18	C.S. Wotanabe	EINZYLINDER KOMPRESSOR		
	RANGE OF NOMINAL DIMENSIONS (± mm)								EXPERT CODE 6 3 5		COMPRESSEUR MONOCYLINDRIQUE		
CLASS 1)	≤ 50	> 50 ≤ 180	> 180 ≤ 400	> 400					MASS 14.3 KG	SCALE 1:1	COMPRESSORE MONOCILINDRICO		
FINE	0.5	1.0	1.5	2.0					PRODUCT IDENTIFICATION NO.			DOC. CODE	SHEET
MEDIUM X	1.0	2.0	3.0	4.0	±3°	087812	1 x C	04-07-15	912 125 000 0			605	1/1
COARSE	2.0	3.5	5.0	6.5		087805	4 x B	03-11-17	SIZE A 0	TRI 510			
TAPPED HOLES ACC. ISO 4029 / JED-152						087802	4 x A	11-12-02	FUNCTION CODE	SHAPE CODE -	PRODUCT TYPE -	REPLACEMENT FOR 884 503 043 0	
1) TOLERANCE CLASS APPLIED CROSSMARKED						DON NO.	REV.	DATE					

Dw: SPECIAL100... .DRS
TML: SPECIAL100... .A02