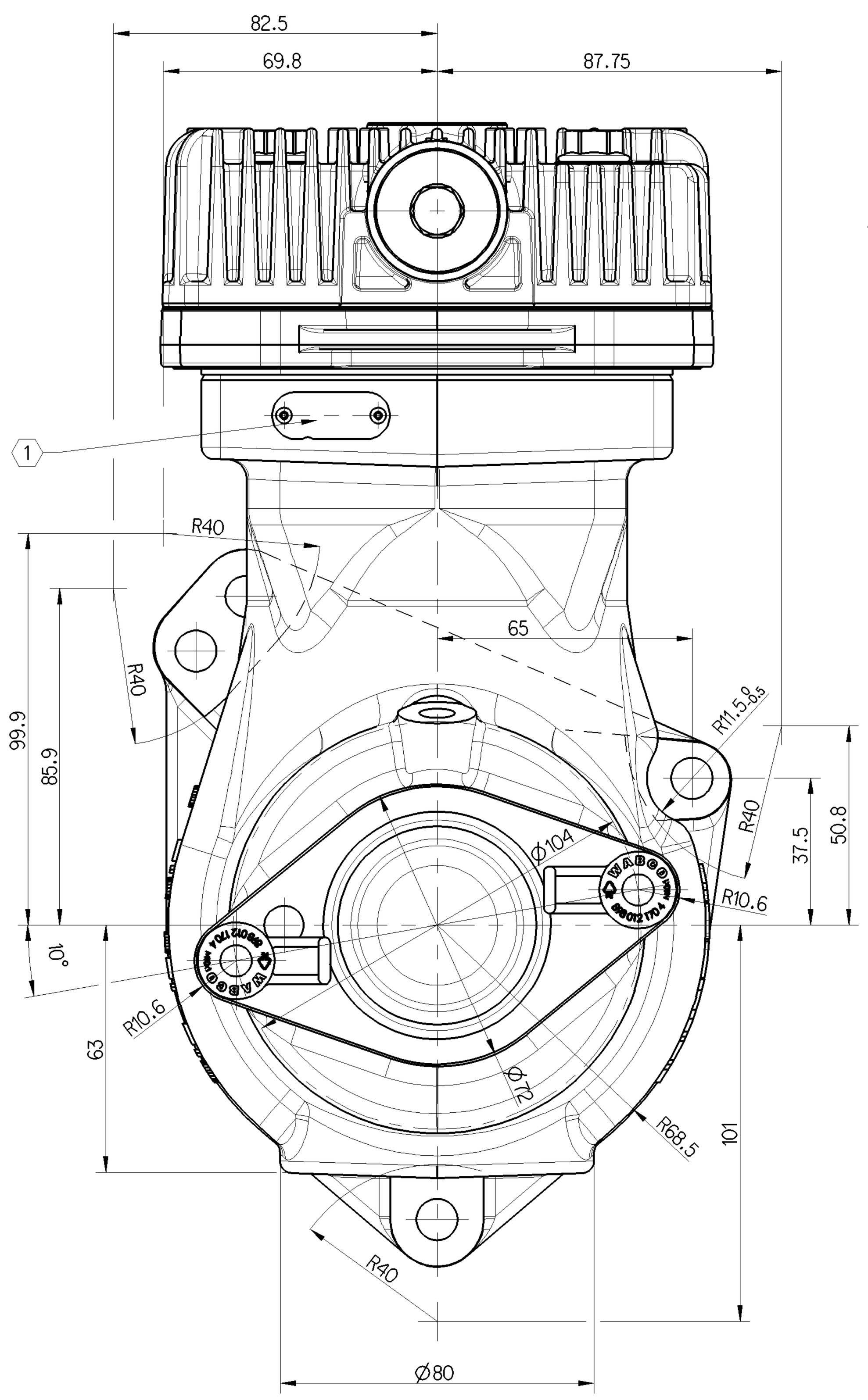

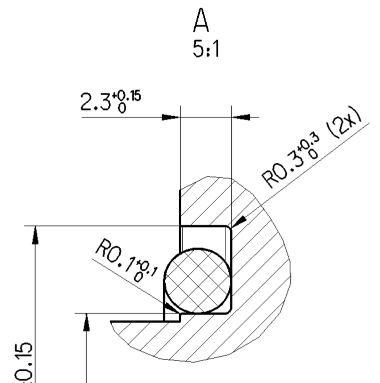

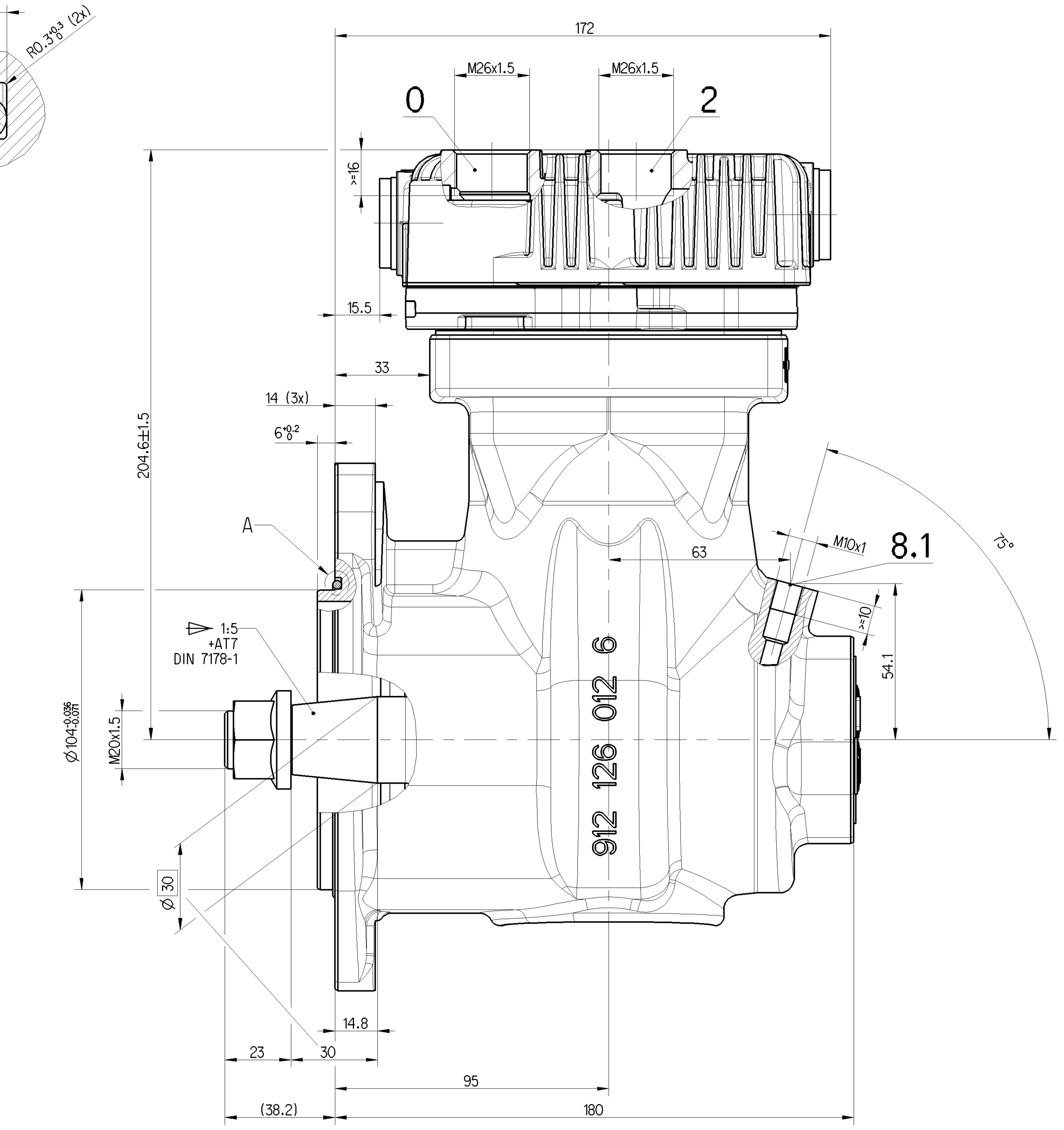

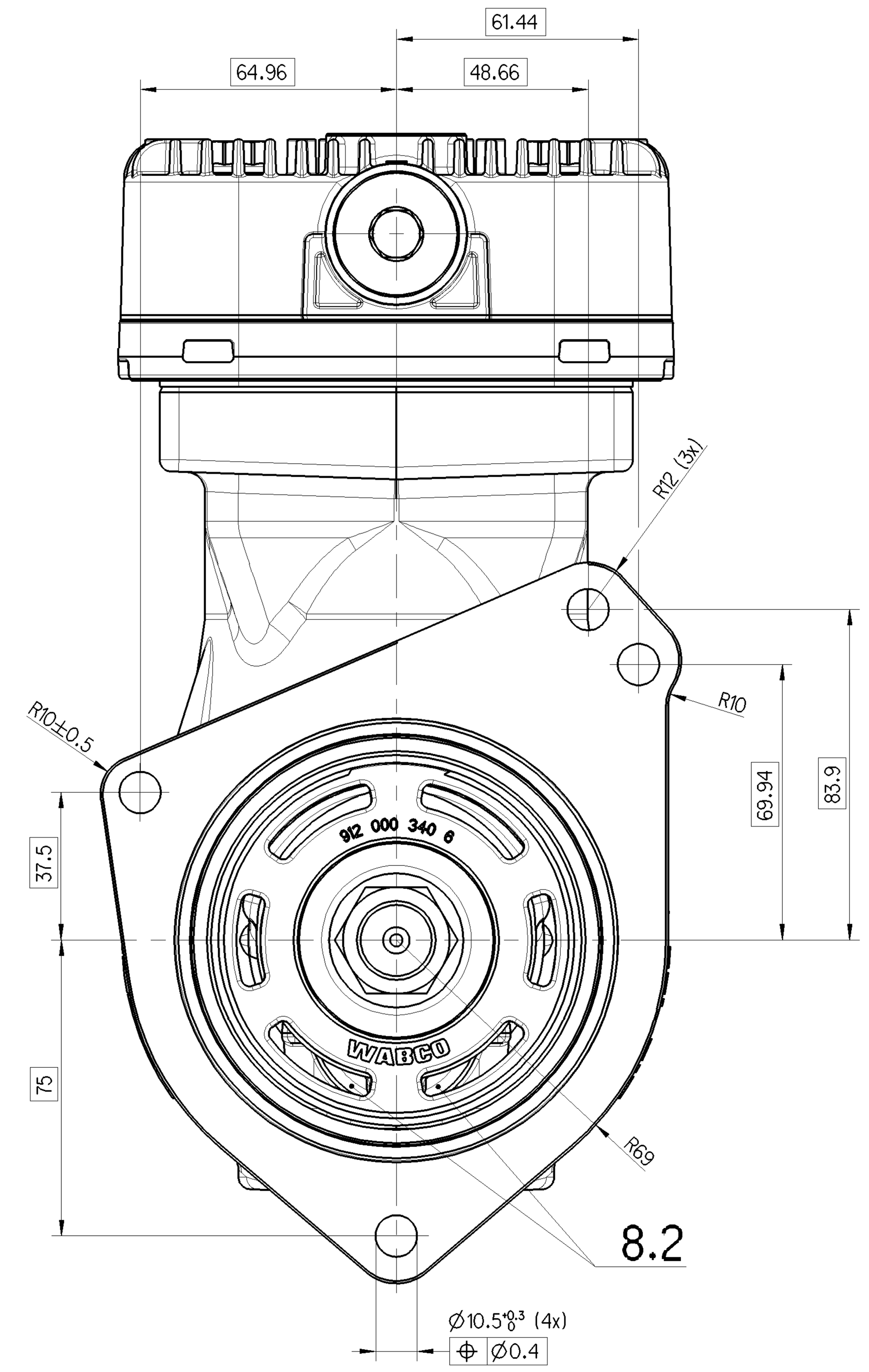

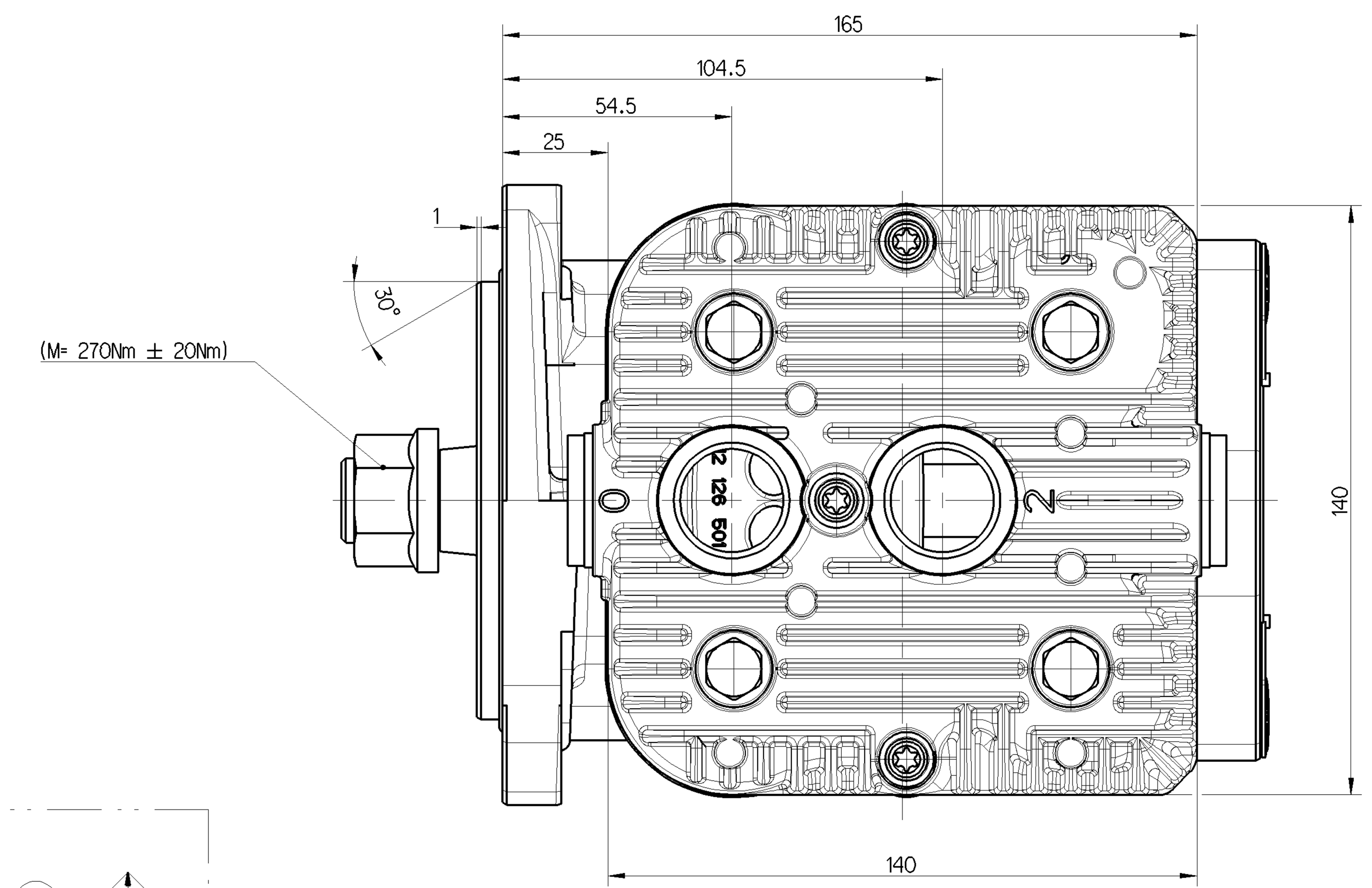

WORKING MEDIUM	AIR
BORE	Ø 85 mm
STROKE	42 mm
SWEPT VOLUME	238 cm^3
MAX. WORKING SPEED	n_{max} = 3000 min^{-1}
OVERSPEED (MAX. 4 SEC.)	n_{ue} = 1.3 x n_{max}
MAX. WORKING PRESSURE	p = 8.5 bar
MAX. PRESSURE AT DISCHARGE PORT	p = 10 bar
MAX. PRESSURE AT DISCHARGE PORT (TEMPORARILY <= 4 SEC.)	p = 12 bar
COOLING - AIR FLOW	V = 4 m/s min.
END PLAY OF CRANKSHAFT	0.1 ... 0.8 mm
LUBRICATION SUPPLIED FROM ENGINE	

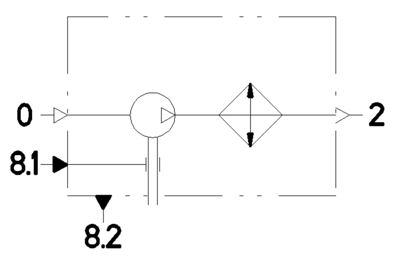

MAX. PERMISSIBLE TILT DURING CONTINUOUS WORKING

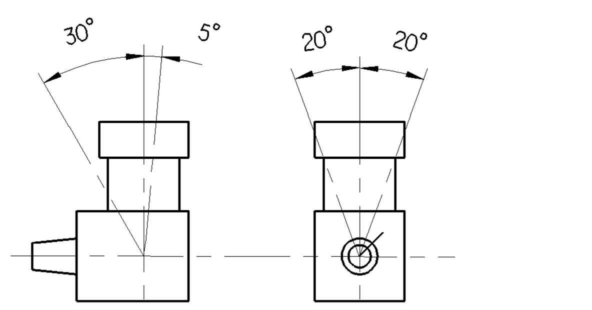

0	INLET PORT	M <= 100 Nm
2	DISCHARGE PORT	M <= 100 Nm
8.1	OIL SUPPLY	M <= 15 Nm
8.2	OIL DRAIN	

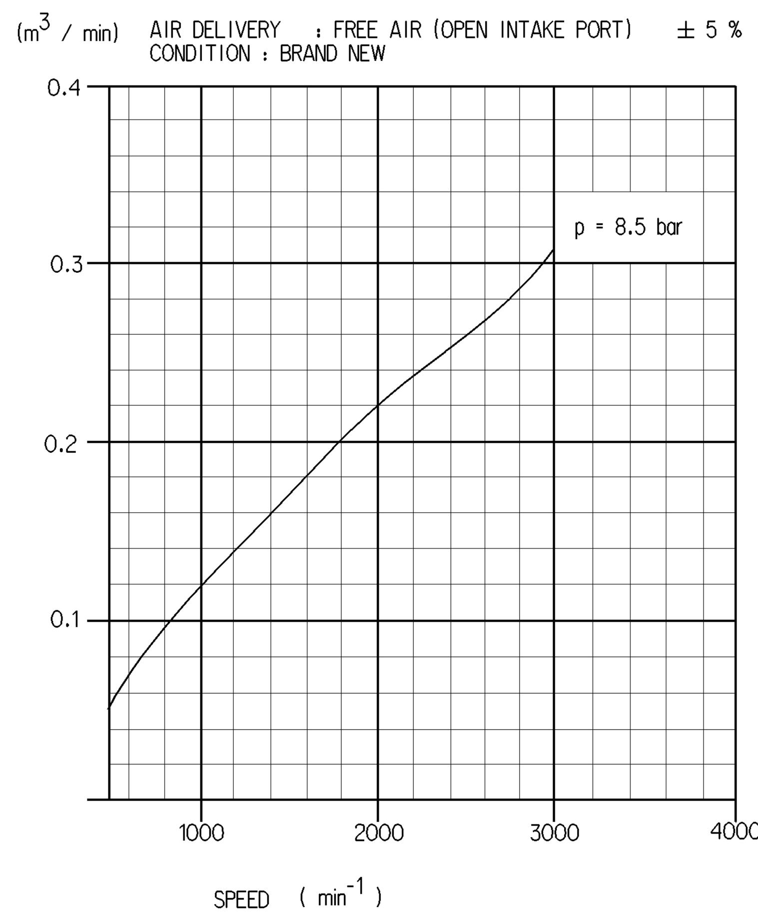

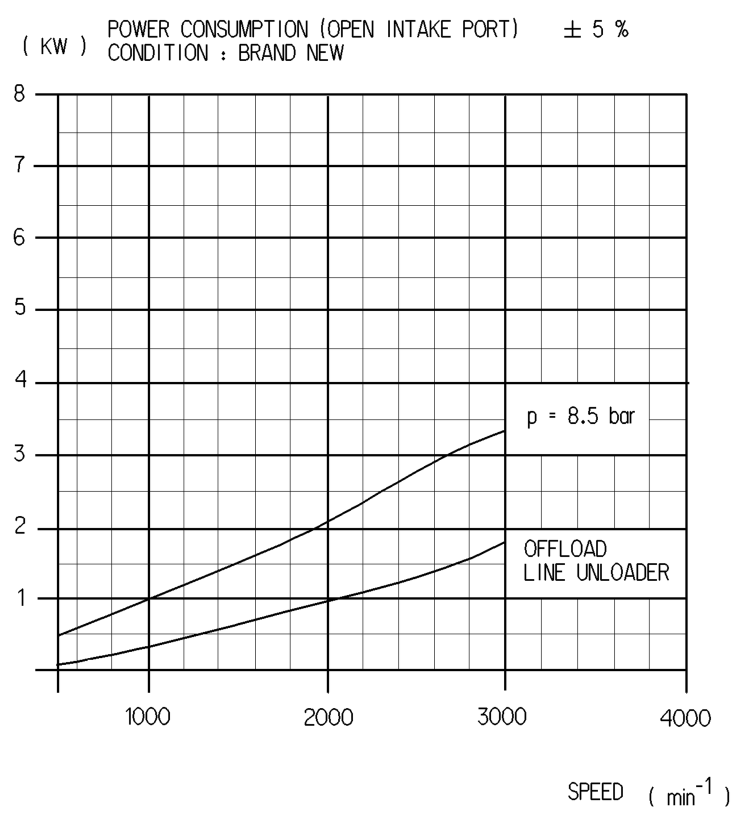

(...) AUXILIARY DIMENSION

⟨1⟩ CUSTOMER'S LABEL

General Specification: JED-334-0						
Further Technical Data: 912 126 002 0						
Doc. Code: 035			Sheet: 1 To 6			
General Tolerances JED-261						
Class 1)	≤ 50	> 50 ≤ 180	> 180 ≤ 400	> 400		
Fine	0.5	1.0	1.5	2.0		
Medium X	1.0	2.0	3.0	4.0	±3°	
Coarse	2.0	3.5	5.0	6.5		
Tapped Holes acc. JED-152						
1) Tolerance Class Applied Crossmarked						

Copyright WABCO®

Date	Signature
Drawn	
2016-12-01	Trokajlo
Checked	
2016-12-02	Slobodzian
Expert	
	Plonski

WABCO

SINGLE CYLINDER COMPRESSOR

Mass	Scale	Material No.	Date of first issue:	2016-12-02	
13.495 KG	1:1	912 126 002 A	Doc.Code	Language	Sheet
			005	EN	1/1
Size	CAD System	ECN-No.	Revision	Techn. Resp.	Replacement for
A 0	CREO	-	- -	2009	-

100mm