TECHNICAL DATA
TECHNISCHE DATEN
CARACTERISTIQUES TECHNIQUES
CARATTERISTICHE TECHNICHE

BORE
BOHRUNG
ALESAGE : ---------- Ø85
ALESAGGIO

STROKE
HUB
COURSE : ---------- 56mm
CORSA

SWEPT VOLUME
HUBRAUM
CYLINDREE : ---------- 318cm³
CYLIDRATA

MAX. WORKING SPEED
MAX. BETRIEBSDREHZAHL
VITESSE D'UTILISATION MAXI. : ---------- $n_{max.}$ = 3000 min^{-1}
VELOCITA DI ESERCIZIO MAX.

OVERSPEED (TEMPORARY MAX. 4 SEC.)
UEBERDREHZAHL (KURZZEITIG MAX. 4 SEC.)
SURVITESSE (DE COURTE DUREE MAXI. 4 SEC.) : ---------- n_{ue} = 1.3•$n_{max.}$
SOVRAVELOCITA (BREVE TEMPO SOLO MAX. 4 SEC.)

MAX. WORKING PRESSURE
MAX. BETRIEBSDRUCK
PRESSION D'UTILISATION MAXI. : ---------- p=10bar *
PRESSIONE DI ESERCIZIO MAX.

MAX. PRESSURE (TEMPORARILY =4 SEC.)
HOECHSTDRUCK (KURZZEITIG =4SEC.)
PRESSION MAXI. (DE COURTE DUREE =4 SEC.) : ---------- p = 14bar *
PRESSIONE MASSIMA (BREVE TEMPO SOLO =4 SEC.)

LUBRICATION: LUBRICATION SUPPLIED FROM ENGINE
SCHMIERART: UMLAUFSCHMIERUNG MIT DRUCKOELANSCHLUSS
GRAISAGE: GRAISSAGE PAR CIRULATION ALIMENTATION PAR LE MOTEUR
LUBRIFICATIONE: LUBRIFICATIONE A CIRCOLATIONE ALIMENTATIONE DAL MOTORE

MAX. PERMISSIBLE TILT DURING CONTINUOUS WORKING
MAX. ZULAESSIGE NEIGUNG IM DAUERBETRIEB
INCLINAISION MAX. ADMISSE EN SERVICE CONTINU
MASSIMA INCLINAZIONE AMMESSA IN CASO DI SERVIZIO CONTINUO

END PLAY OF CRANKSHAFT
AXIALSPIEL DER KURBELWELLE
JEU AXIAL DU VIREBREQUIN : ---------- 0.08...0.38mm
GIOCO ASSIALE DELL'ALBERO A GOMITO

* MEASURING POINT : DISCHARGE PORT
MESSPUNKT : DRUCKANSCHLUSS
POINT DE MESURA : REFOULEMENT
PUNTO DI MESURA : COMPRESSIONE

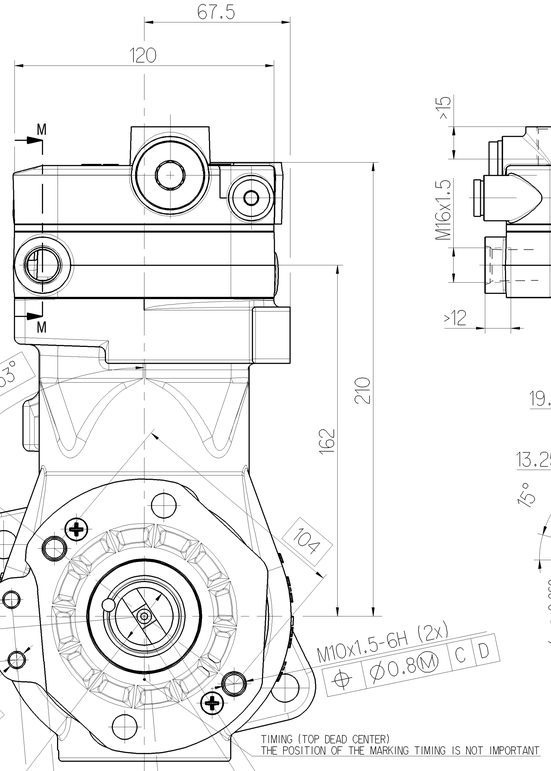

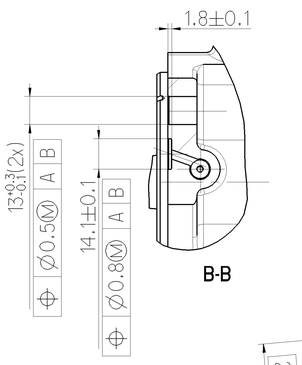

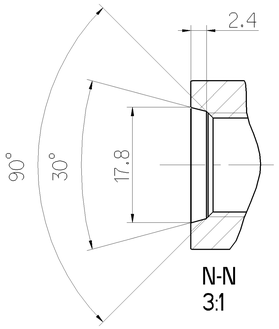

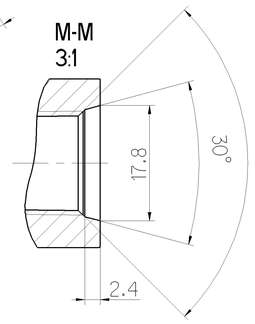

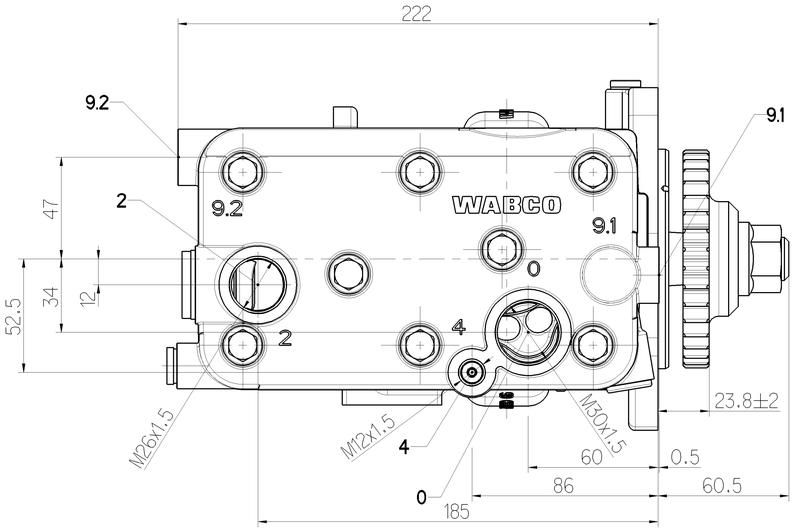

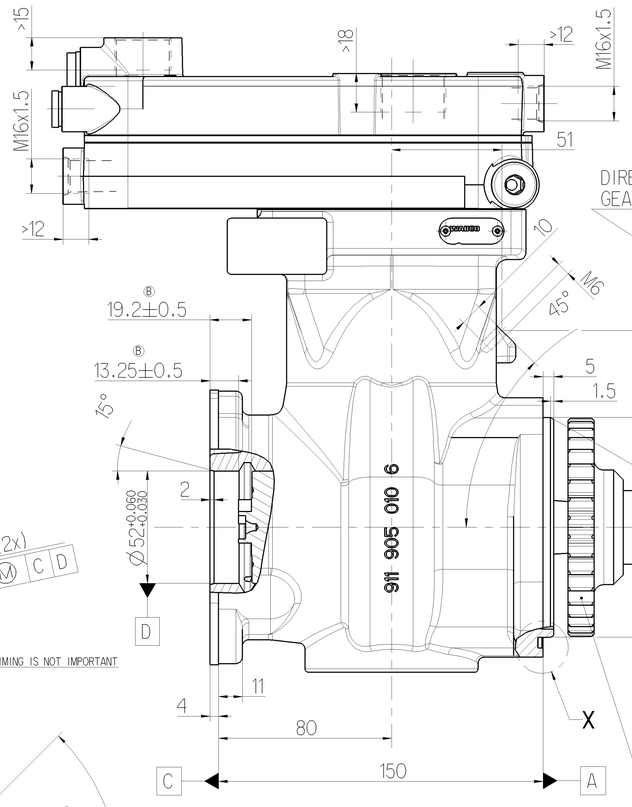

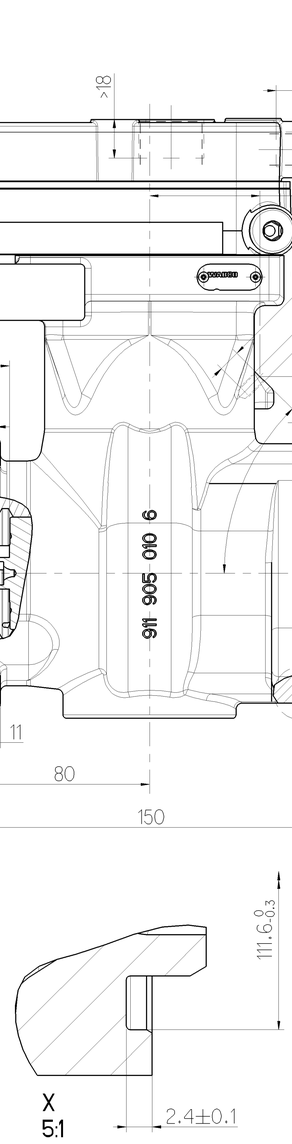

DIRECTION OF GEAR ROTATION: CW

TORQUE
LEFT HAND

ANZUGSMOMENT
LINKE HAND

COUPLE DE SERRAGE : 200±20Nm
MAIN GAUCHE

COOPIA DI SERRAGIO
MANO SINISTRA

CUMMINS REF. 4981225

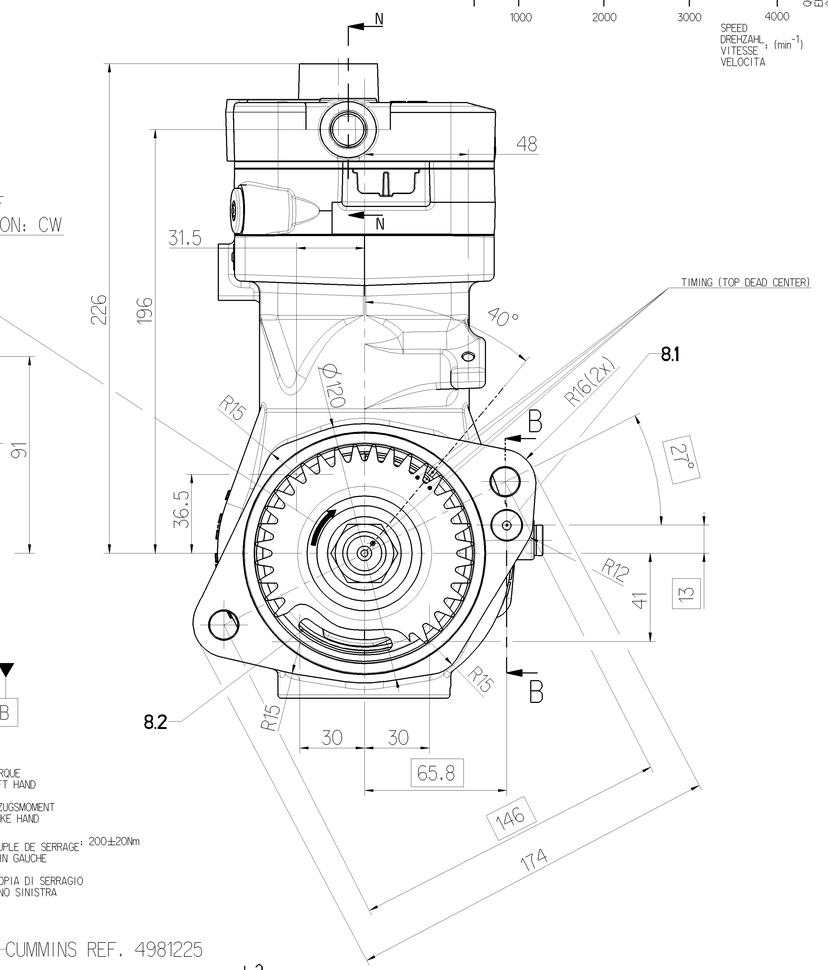

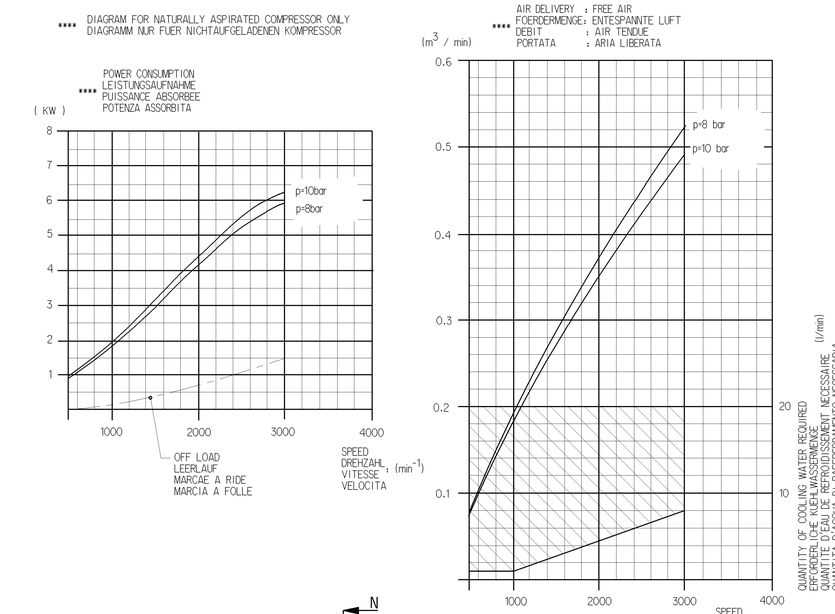

9.1/9.2 : COOLING CONNECTION
KUEHLWASSERANSCHLUSS
CONNEXION DE FLUIDE DE REFROIDISSEMENT
COLLEGAMENTO LIQUIDO REFRIGERANTE
M<= 35 Nm

9.1 ⇄ 9.2 DIRECTIONS OF FLOW
DURCHSTROEMRICHTUNGEN

8.1 : OIL SUPPLY
DRUCKOELANSCHLUSS
ORIFICE D'ARRIVEE D'HUILE
ORIFICIO D'ARRIVO OLIO

8.2 : OIL DRAIN
OELRUECKLAUF
RETOUR D'HUILE
RITORNO OLIO

0 : INLET PORT
SAUGANSCHLUSS
ASPIRATION
ASPIRATIONE
M<= 120 Nm

2 : DISCHARGE PORT
DRUCKANSCHLUSS
REFOULEMENT
COMPRESSIONE
M<= 100 Nm

4 : GOVERNOR PORT
STEUERANSCHLUSS
RIFICE DE COMMANDE
ORIFICIO DI COMMANDO
M<= 25 Nm

(...) AUXILIARY DIMENSION
HILFSMASS
DIMENSION AUXILIAIRE
DIMENSIONE AUSILIARIA

FREE FROM ASBESTOS

THIRD ANGLE PROJECTION

General Specification: JED-334-1 , Size ISO 14405 LP																			
Further Technical Data:																			
Doc. Code:							Sheet:		To										
General Tolerances JED-261																			
		Range of Nominal Dimensions (± mm)																	
Class	1)	≤ 50	> 50 ≤ 180	> 180 ≤ 400	> 400														
Fine		0.5	1.0	1.5	2.0														
Medium		1.0	2.0	3.0	4.0	±3°													
Coarse		2.0	3.5	5.0	6.5														
Tapped Holes acc.																			
1) Tolerance Class Applied Crossmarked																			

Copyright WABCO®

Date	Signature
Drawn 2014-11-24	Campos
Checked 2014-11-27	Hoelzel
Expert Hoelzel	

Mass	Scale	Material No.	Date of first issue	
kg 14	1:1 (3:1/5:1)	912 140 011 0	Doc.Code 2011-02-22	Language / Sheet
			005	ML / 1/1
Size A 0	CAD System CREO	ECN-No. 162433 / Revision 2 x B / Techn. Resp. 5000	Replacement for -	

WABCO

SINGLE CYLINDER COMPRESSOR
EINZYLINDERKOMPRESSOR
COMPRESSEUR MONOCYLINDRIQUE
COMPRESSORE MONOCILINDRICO

100mm