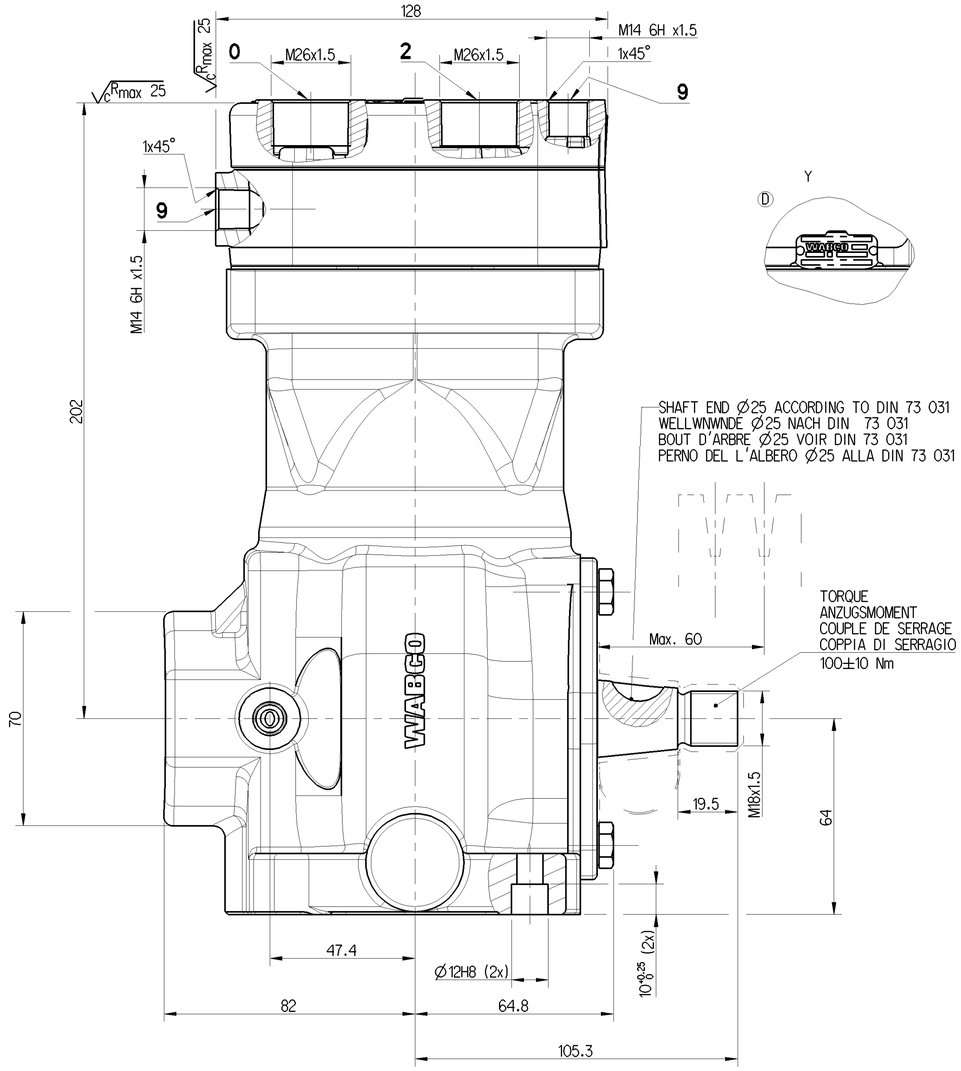

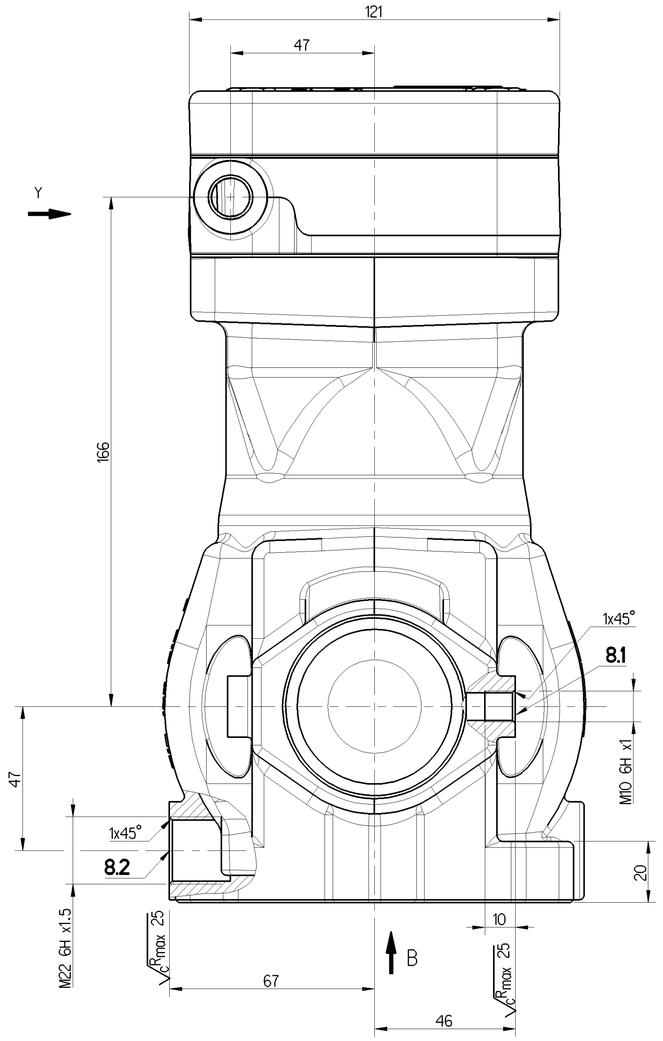

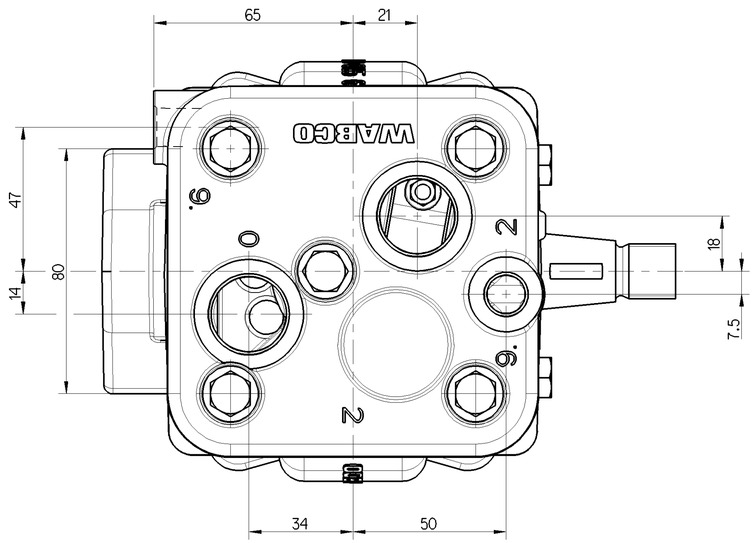

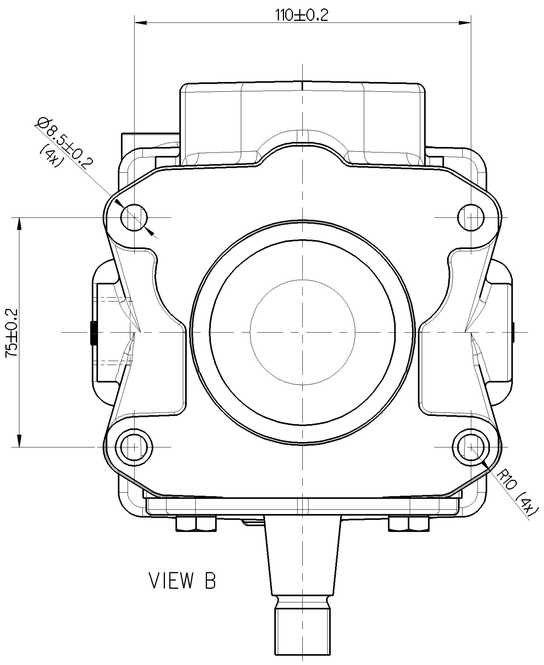

VIEW B

52F7	+0.06 +0.03
Ø12H8	+0.027 0.000

1. BORE / BOHRUNG / ALESAGE / ALESAGGIO — Ø85 mm
2. STROKE / HUB / COURSE / CORSA — 42 mm
3. SWEPT VOLUME / NUBRAUM / CYLINDRE / CILINDRATA — 238 cm^3
4. WORKING SPEED / BETRIEBSDREHZAHL / VITESSE D'UTILISATION / VELOCITA DI ESECIZIO — n_{max}= 3000 min^{-1}
5. MAX. SPEED (TEMPORARILY) / NOECHSTDREHZAHL (KURZZEITIG) / VITESSE MAXI (DE COURTE DUREE) / VELOCITA MASSIMA (BREVE TEMPO SOLO) — n_{max}= 3300 min^{-1}
6. WORKING PRESSURE / BETRIEBSDRUCK / PRESSION D'UTILISATION / PRESSIONE DI ESERCIZIO — 8 bar
7. MAX. PRESSURE (TEMPORARILY) / NOECHSTRUCK (KURZZEITIG) / PRESSION MAXI (DE COURTE DUREE) / PRESSIONE MAX. (BREVE TEMPO SOLO) — 12.5 bar
8. LUBRIFICATION / SCHMIERART / GRAISSAGE / LUBRIFICAZIONE
   : CIRCULATION LUBRIFICATION SUPPLIED FROM ENGINE
   : UMLAUFSHMI ERUNG MIT DRUCKOELANSCHLUSS (UD)
   : GRAISSAGE PAR CIRCULATION ALIMENTATION PAR LE MOTEUR
   : LUBRIFICAZIONE A CIRCOLAZIONE ALIMENTAZIONE DAL MOTORE
9. REQUIRED QUANTITY OF COOLING WATER / ERFORDERLICHE KUEHLWASSERMENGE / QUANTITE D'EAU NECESSAIRE / QUANTITA D'ACQUA NECESSARIA — 6 l/min (*)
10. END PLAY OF CRANKSHAFT / AXIALSPIEL DER KURBELWELLE / JEU AXIAL DU VIREBREQUIN / GIOCO ASSIALE DELL' ALBERO A GOMITO — 0.13...0.69mm

(*) MAX. PERMISSIBLE PRESSURE TEMPERATURE IN SERVICE

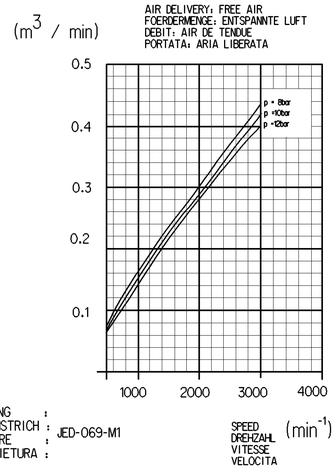

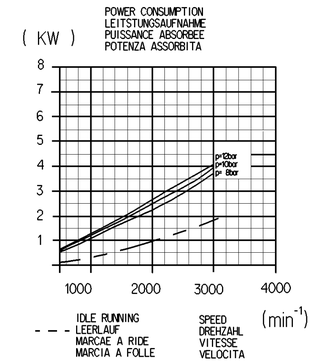

PAINTING : / FARBANSTRICH : / PAINTURE : / VERNICIETURA : JED-069-M1

0 INLET PORT / SAUGANSCHLUSS / ASPIRATION / ASPIRAZIONE

2 DISCHARGE PORT / DRUCKANSCHLUSS / REFOULEMENT / COMPRESSIONE

8.1 OIL SUPPLY / DRUCKOELANSCHLUSS / ARRIVEE D'HUILE / ARRIVO OLIO

8.2 OIL DRAIN / OELRUECKLAUF / RETOUR D'HUILE / RITORNO OLIO

9 PORT FOR COOLING WATER / WASSERANSCHLUSS / ORFICE D'EAU / ORFIZIO D'ACQUA

MAX. ZULAESSIGE EINBAUNEGUNG
MAX. PERMISSIBLE TILT
INCLINASION ADMISSIBLE MAXI.
INCLINAZIONE AMMISSIBILE MASS.

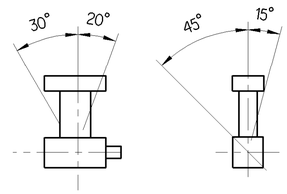

General Specification: JED-334-1					
Further Technical Data:					
Doc. Code:		Sheet:		To	
General Tolerances JED-261					
Range of Nominal Dimensions (± mm)					
Class 1)	≤ 50	> 50 ≤ 180	> 180 ≤ 400	> 400	∢
Fine	0.5	1.0	1.5	2.0	
Medium	1.0	2.0	3.0	4.0	±3°
Coarse	2.0	3.5	5.0	6.5	
Tapped Holes acc. JED-152					
1) Tolerance Class Applied Crossmarked					

Copyright WABCO®

Date	Signature
Drawn 2017-04-20	Oliveira
Checked 2017-04-27	Joeger
Expert	Hoelzel

WABCO

SINGLE CYLINDER COMPRESSOR
EINZYLINDER KOMPRESSOR
COMPRESSEUR MONOCYLINDRIQUE
COMPRESSORE MONOCILINDRICO

Mass	Scale	Material No.	Date of first issue: 2014-04-30		
10.240 KG	1:1	912 150 006 0	Doc.Code 005	Language ML	Sheet 1/1
Size A 1	CAD System Pro/E	ECN-No. 171721	Revision 1x D	Techn. Resp. 5000	Replacement for -

Toute Communication ou reproduction de ce document, toute exploitation ou communication de ses contenus sont interdites, sauf autorisation écrite. Tous droits de propriété industrielle réservés, notamment en matière de brevets et de modèles.

Non è permesso consegnare a terzi o riprodurre questo documento, né utilizzarne il contenuto o renderlo comunque noto a terzi senza autorizzazione scritta. Si riserva il diritto di proprietà industriale, anche per quanto attiene ai brevetti e modelli.

Copying of this document and giving it to others and the use or communication of the contents thereof, are forbidden without express authority. Offenders are liable to the payment of damages. All rights are reserved in the event of the grant of patent or registration of a utility model or design. This document is the subject of copyright.

Weitergabe sowie Vervielfältigung dieser Unterlage, Verwertung und Mitteilung ihres Inhalts nicht gestattet, soweit nicht ausdrücklich zugestanden. Zuwiderhandlungen verpflichten zu Schadenersatz. Alle Rechte für den Fall der Patent- oder Gebrauchsmustereintragung vorbehalten.