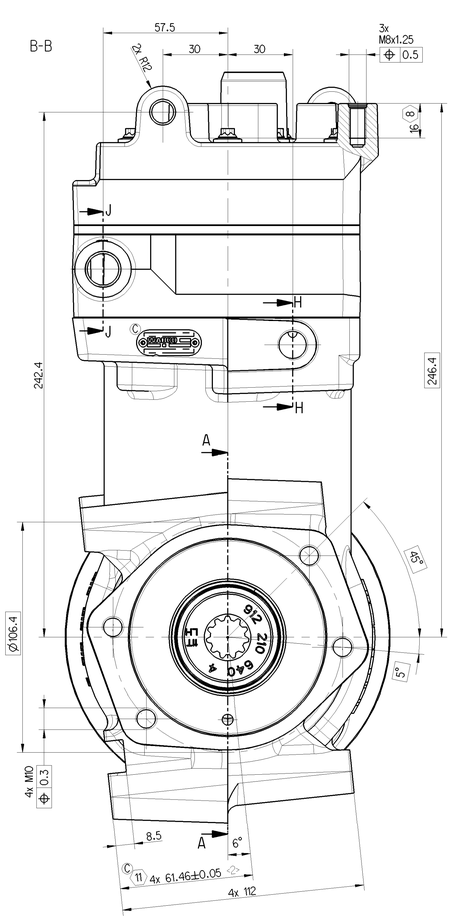

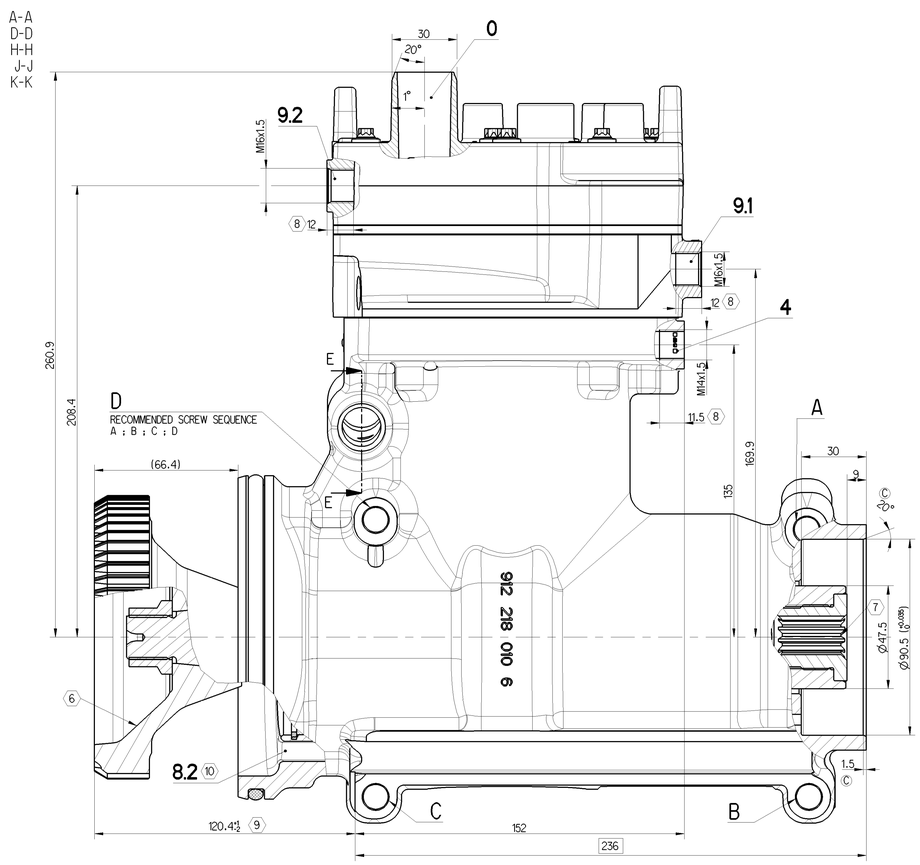

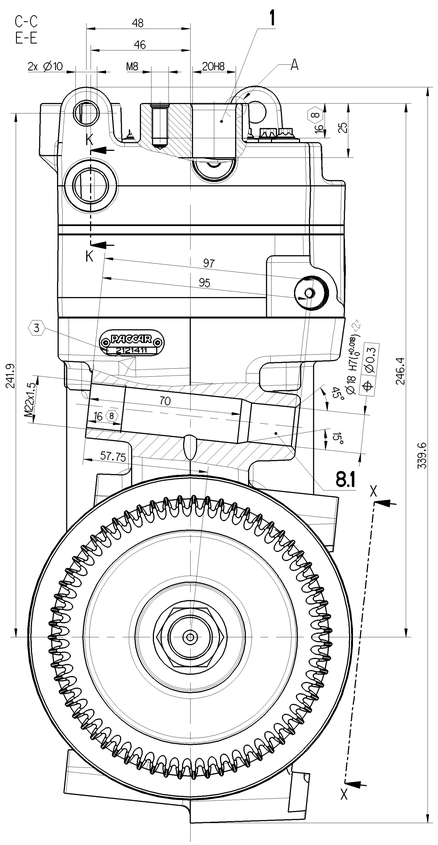

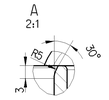

WORKING MEDIUM : / BETRIEBSMEDIUM :	AIR / LUFT
COOLANT : / KUEHLMEDIUM :	WATER WITH ANTIFREEZE / WASSER MIT FROSTSCHUTZ
BORE : / BOHRUNG :	Ø 100 mm
STROKE : / HUB :	56 mm
SWEPT VOLUME : / HUBRAUM :	440 cm^3
MAX. WORKING SPEED : / MAX. BETRIEBSDREHZAHL :	n_{max} = 3000 min^{-1}
OVERSPEED (MAX. 4 SEC.) : / UEBERDREHZAHL (MAX. 4 SEC.) :	n_{ue} = 1.3 x nmax
MAX. WORKING PRESSURE: / MAX. BETRIEBSDRUCK:	p_e = 12.5 bar
MAX. PRESSURE AT DISCHARGE PORT: / HOESTDRUCK AM DRUCKSTUZEN:	p_e = 14.5 bar
MAX. PRESSURE AT DISCHARGE PORT (TEMPORARILY ≤ 4 sec.): / HOESTDRUCK AM DRUCKSTUZEN (KURZZEITIG ≤ 4 Sek) :	p_e = 18.5 bar
OPENING PRESSURE SAFETY VALVE : / OEFFNUNGSDRUCK SICHERHEITSVENTIL :	21±3 bar
END PLAY OF CRANKSHAFT: / AXIALSPIEL DER KURBELWELLE:	0.1 ... 0.8 mm
LUBRICATION SUPPLIED FROM ENGINE / UMLAUFSCHMIERUNG MIT DRUCKÖLANSCHLUSS	
FREE FROM ASBESTOS / ASBESTFREI	

0	SUCTION PORT / SAUGANSCHLUSS	
2	DISCHARGE PORT / DRUCKANSCHLUSS	
4	GOVERNOR PORT / STEUERANSCHLUSS	M <= 20 Nm
8.1	OIL SUPPLY / DRUCKÖLANSCHLUSS	M <= 35 Nm
8.2	OIL DRAIN / ÖLRÜCKLAUF	
9.1 ⇄ 9.2	COOLANT CONNECTION / KUEHLMITTELANSCHLUSS	M <= 60 Nm

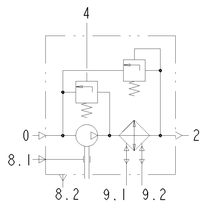

MAX. PERMISSIBLE TILT DURING CONTINUOUS WORKING
MAX. ZULAESSIGE NEIGUNG IM DAUERBETRIEB

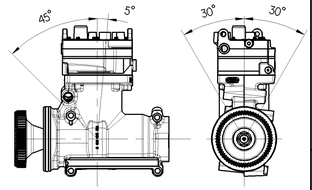

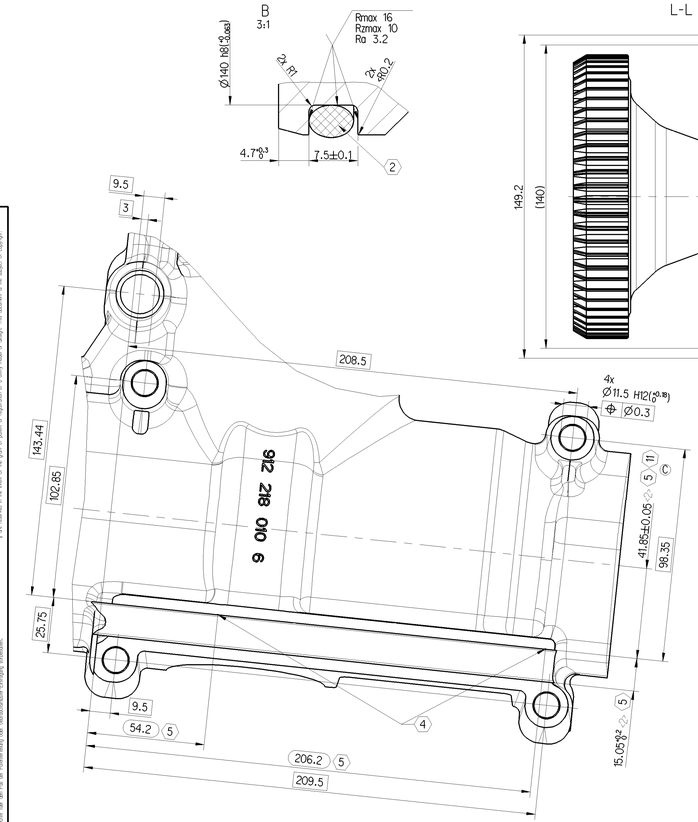

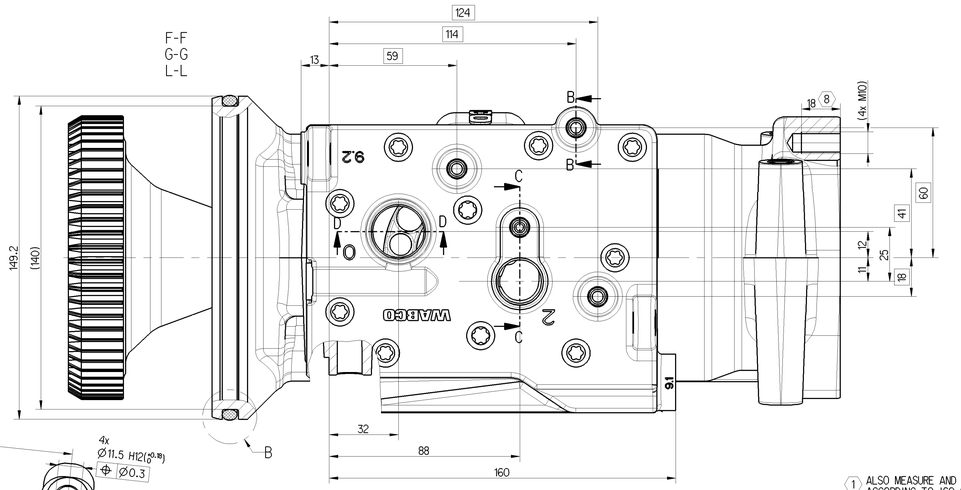

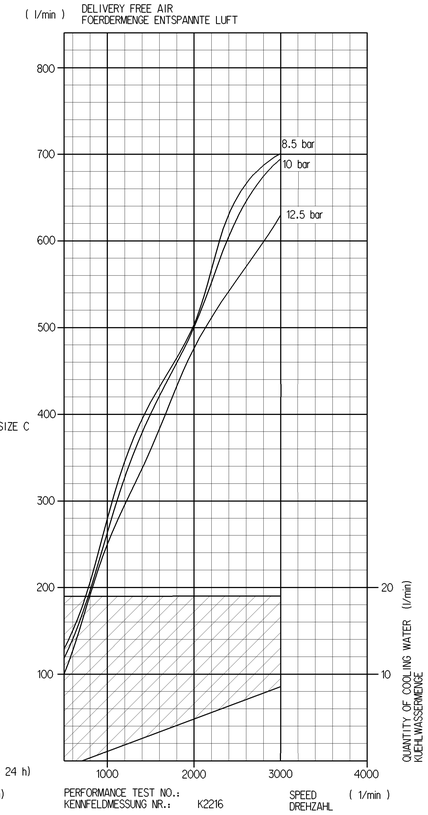

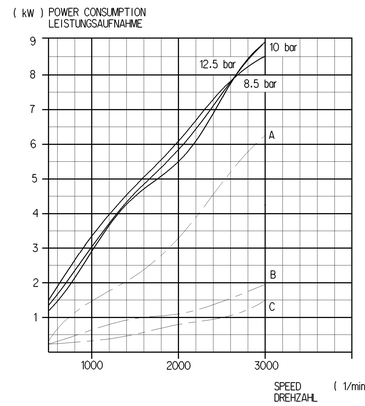

OFF LOAD / LEERLAUF

A) COMBINED UNLOADER / DRUCKREGLER

B) PR-SYSTEM — DISCHARGE LINE VENTED / ENTLUEFTETE DRUCKLEITUNG

C) PR-SYSTEM — DISCHARGE LINE PRESSURIZED / BELUEFTETE DRUCKLEITUNG

1. ALSO MEASURE AND RECORD PARTICLE CLASS SIZE C ACCORDING TO ISO 16232-10 / AUCH PARTIKEL DER KLASSE C MESSEN UND AUFZEICHNEN NACH ISO 16232-10
2. O-Ring Ø132±1.04 x Ø6±0.13
3. CUSTOMER NO.: / KUNDEN NR.: 212 14 11
4. INSPECTIONS POINTS FOR MESSPUNKTE FUER 5
6. DAF-GEAR-NR.: / DAF-ZAHNRAD-NR.: 164 1625
7. Flat root side fil spline 16/32, 11 feeth to correspond with ANSI B92.1-1970, class 5 / Evolventen-Zahnwellenprofil 16/32, 11 Zaehne noch ANSI B92.1-1970, Klasse 5
8. MAX. THREAD ENGAGEMENT / MAX. EINSCHRAUBTIEFE
9. WITHOUT AXIAL CLEARANCE OF CRANKSHAFT / OHNE AXIALSPIEL DER KURBELWELLE CRANKSHAFT CLOSED REAR END / KURBELWELLE ABTRIEBSEITIG ANLIEGEND
10. REMAINDER OIL <10 ml DRIVE-LATERALLY (DRIPPING OF TIME 10 min , MEASURED AFTER 24 h) / RESTOEL <10 ml ANTREIBSSEITIG (ABTROPFZEIT: 10 min , GEMESSEN NACH 24 h)
11. © ONLY MEASUREABLE ON SINGLE COMPONENT / NUR AN EINZELTEIL MESSBAR

CLEANLINESS REQUIREMENT

SOFT PARTICLES ARE ALLOWED UP TO 2 mm X 0.1 mm X 0.1 mm

FIBERS ARE ALLOWED UP TO A MAXIMUM DIAMETER OF 0.1 mm AND A MAXIMUM LENGTH OF 10 mm.

CHAMBER	SURFACE AREA [cm^2]	VOLUME [cm^3]	SPECIFICATION
OIL	3282.67	2396.30	JED-593 CLASS II 1
WATER	480.75	-	JED-593 CLASS I
AIR	1515.44	-	JED-593 CLASS III

General Specification: JED-334-1 , Size ISO 14405 LP			
Further Technical Data: 912 218 000 1			
Doc. Code: 035	Sheet:		
General Tolerances JED-261			
Class 11	Range of Nominal Dimensions (± mm)		
	> 50 ≤ 180	> 180 ≤ 400	> 400
Fine X	0.5	1.0	1.5	2.0
Medium	1.0	2.0	3.0	4.0
Coarse	2.0	3.5	5.0	6.5
Tapped Holes acc. JED-152				
11 Tolerance Class Applied Crosshatched				

Copyright WABCO®

Date	Signature	
Drawn 2016-09-22	Hennig	
Checked 2016-09-22	Joeger	
Expert Hennig		
Mass 22.540 kg	Scale 1:1	
Size A0	CAD System CREO	

WABCO

ONE CYLINDER COMPRESSOR
EINZYLINDERKOMPRESSOR

Material No.		Date of first issue 2015-09-3	
		Doc.Code	Language	Sheet
912 218 000 0		005	DE	1/1
ECN-No.	Revision	Techn. Resp.	Replacement for
172106	6 x C	5000	884 018 440 0

100mm

This information is intended to be printed, look editable or transmitted to the entire staff, third parties, and partners. Your employees or other recipients should not use it for purposes other than those for which it was originally intended, nor should it be reproduced in whole or in part, nor should it be made available to third parties without prior consent of WABCO. Any discussions, notes, or other documents, drawings, or other information, including but not limited to, any information regarding WABCO's products, services, or business practices, or any other information, shall not be construed as a commitment by WABCO to enter into any business relationship with you or your employer or any other entity. Your employer and other entities may have different policies, and WABCO does not control the business practices of other companies. Unless you have a written agreement with WABCO that specifically states otherwise, you should not disclose any confidential information to your employer or any other entity. Unless otherwise agreed in writing, WABCO shall own all rights, including all intellectual property rights, in any ideas, concepts, or inventions based on or related to the information in this document. Copyright in this document and any copies to others and the use or communication of the contents thereof, are forbidden without express authority. Offenders are liable to the payment of damages. All rights are reserved in the event of the grant of a patent or registration of a utility model or design. The document is the property of WABCO.