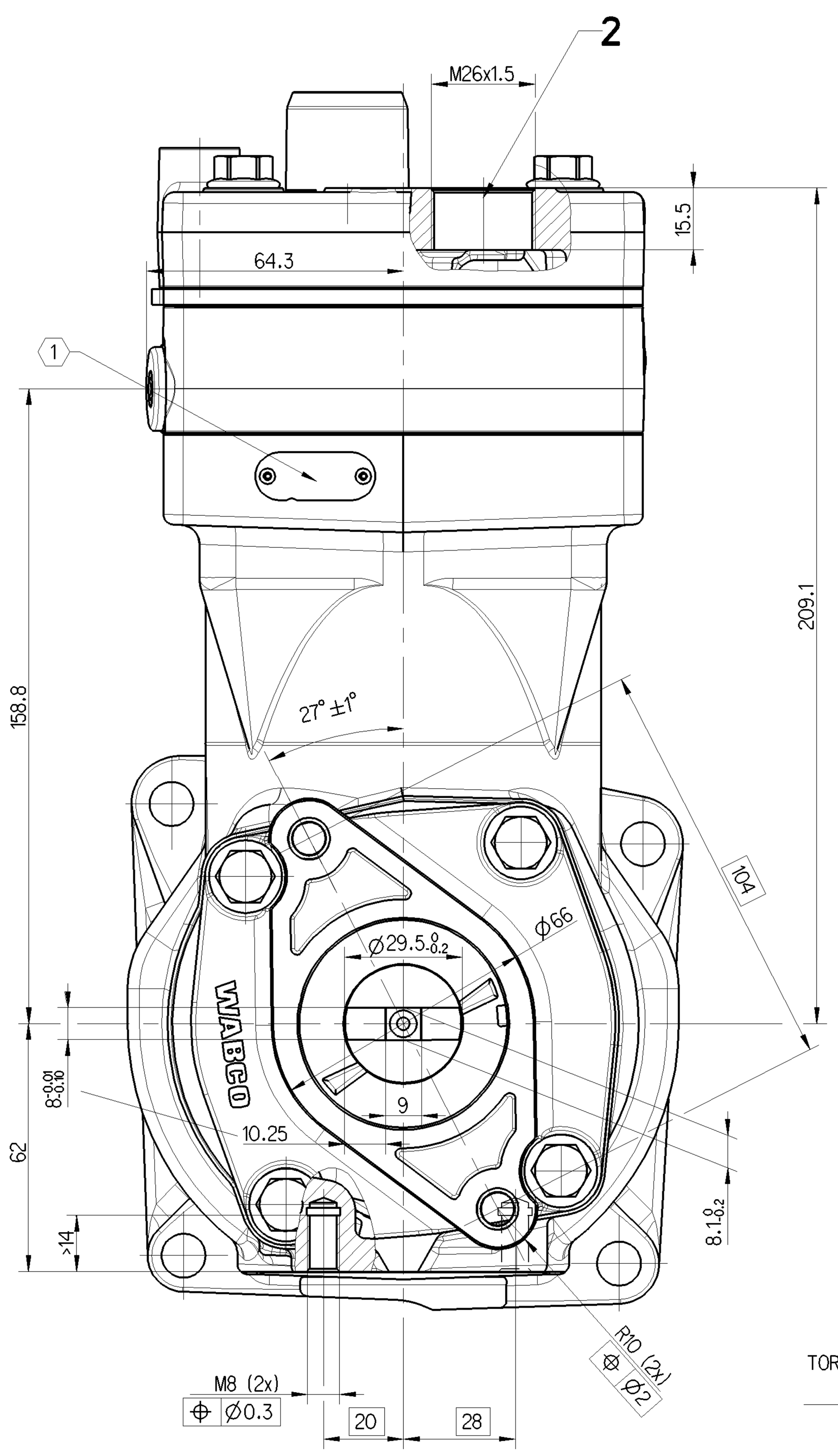

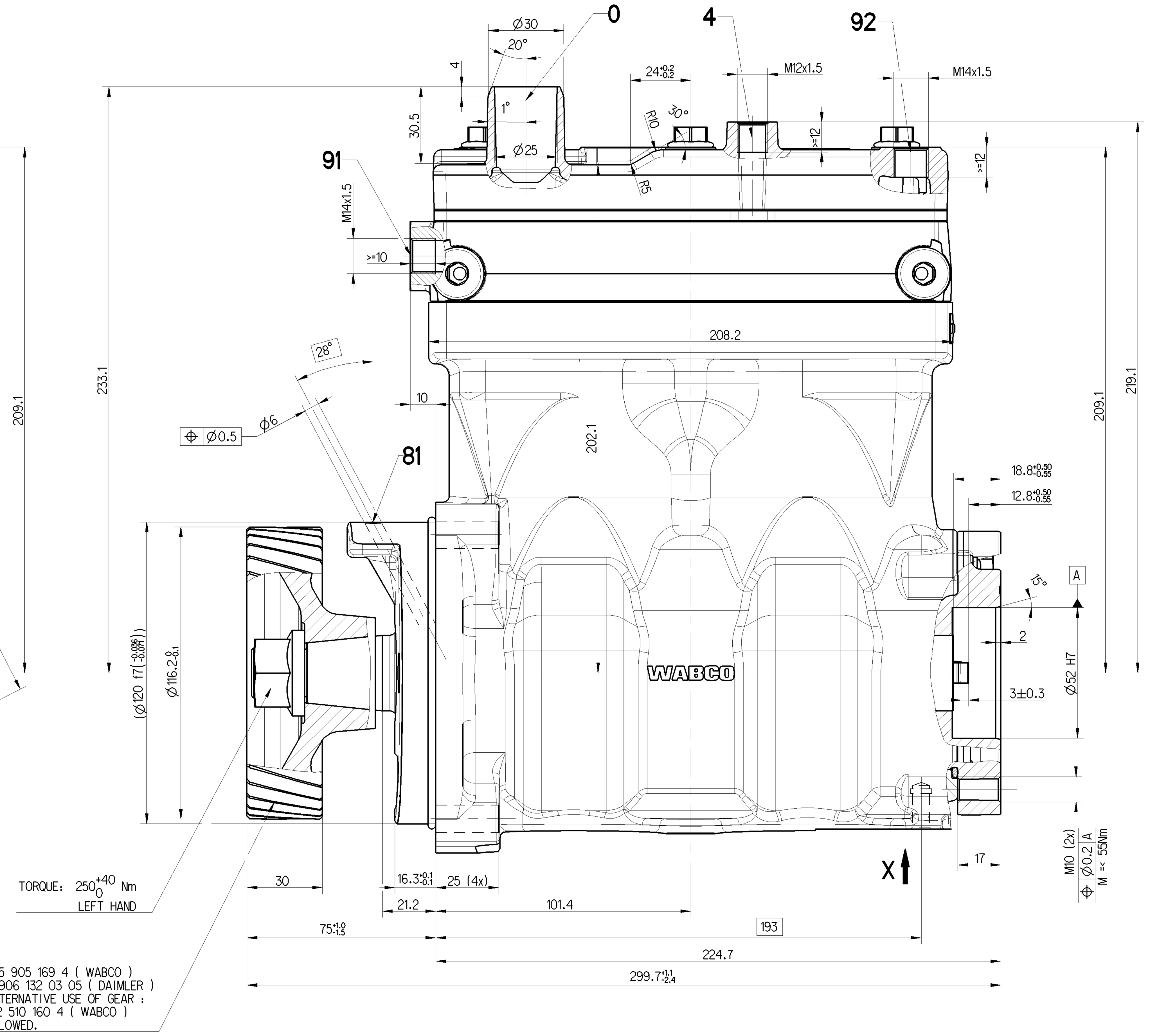

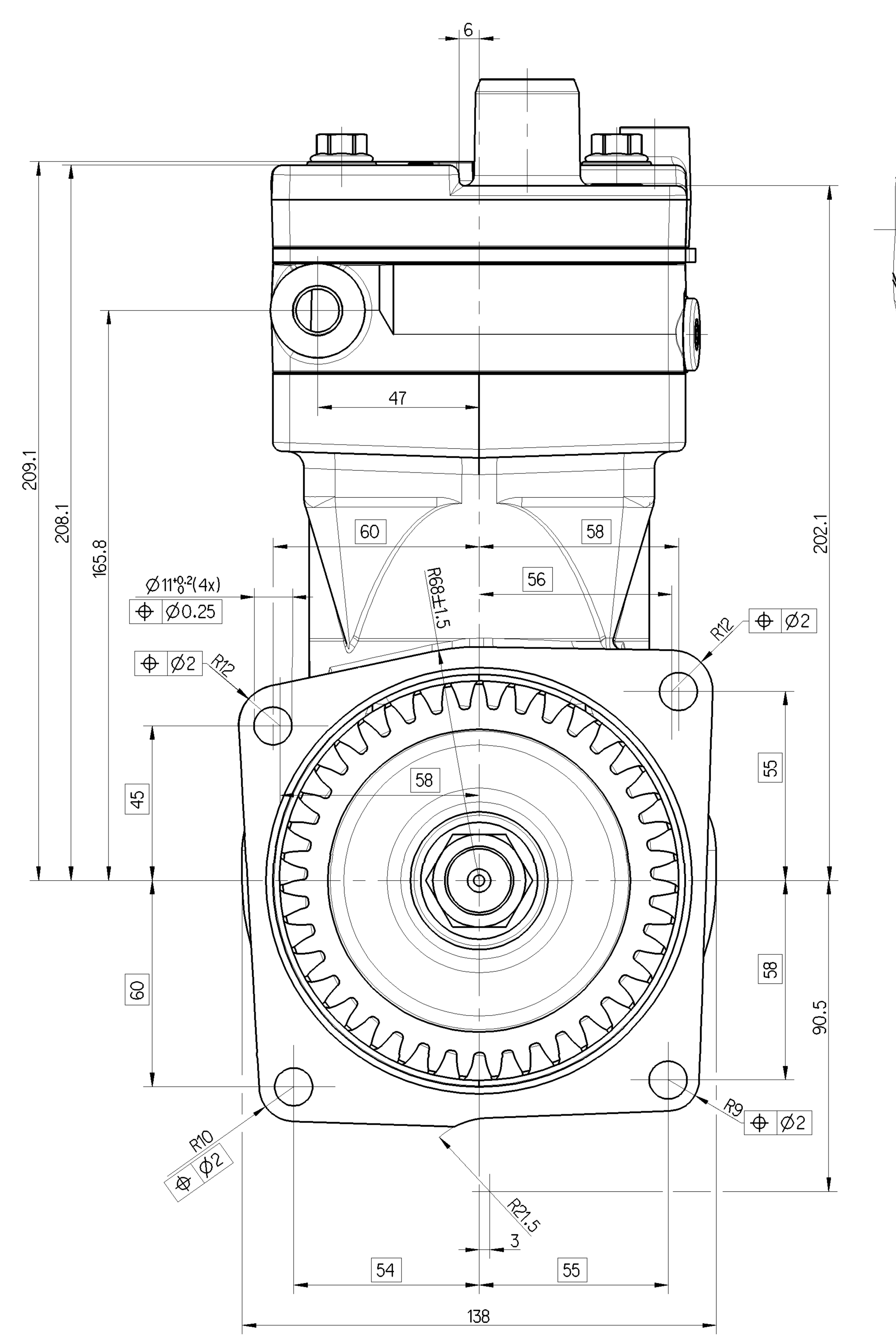

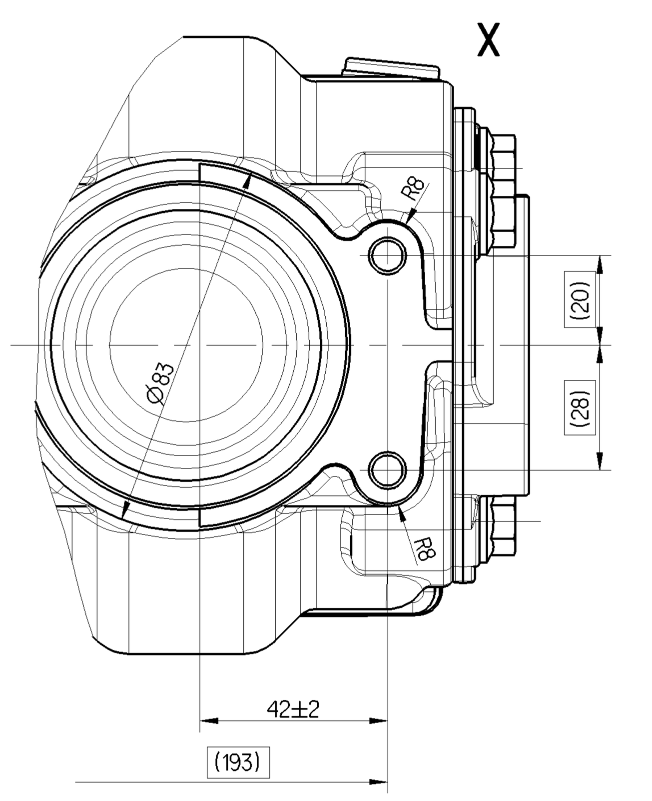

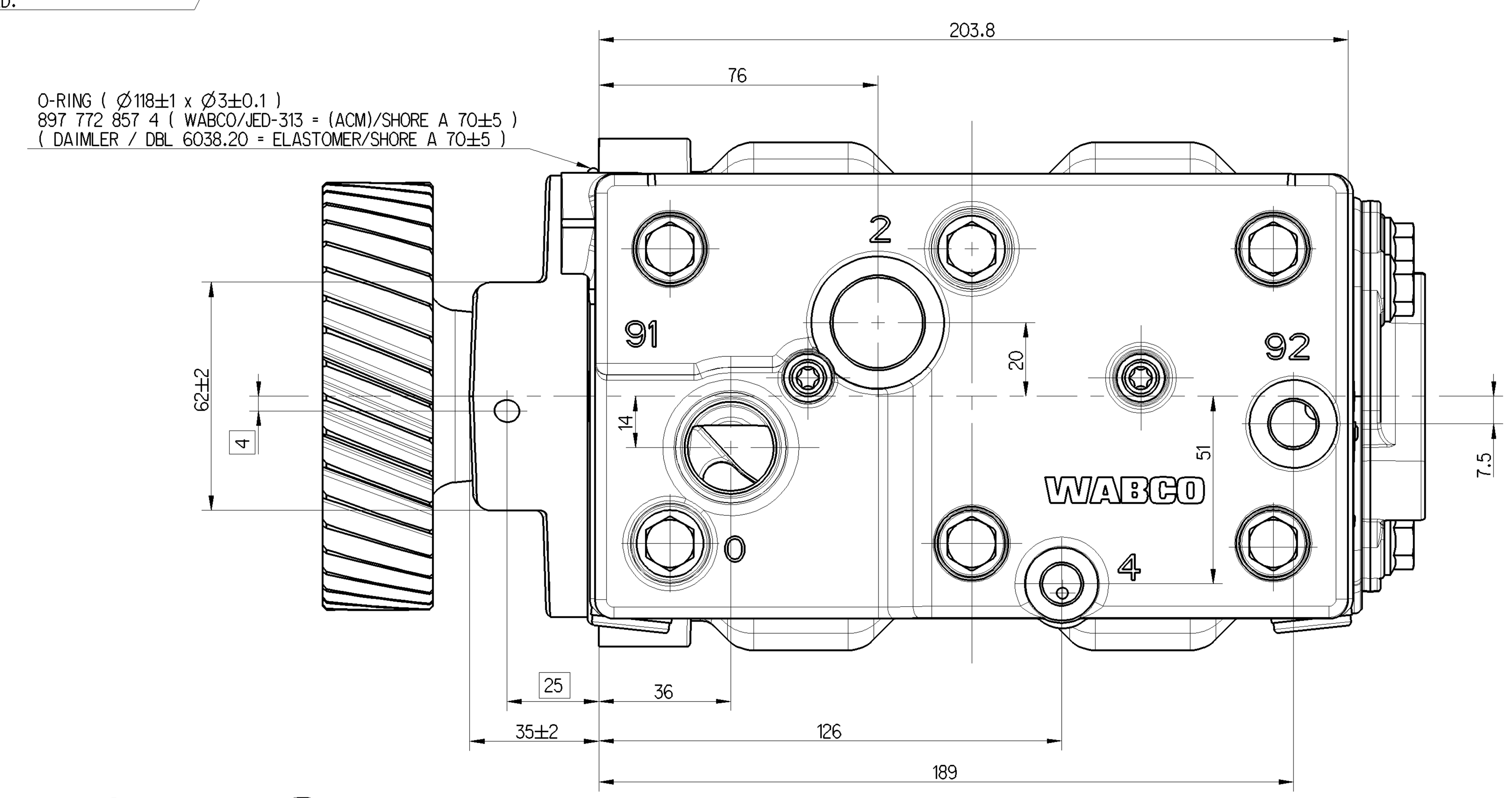

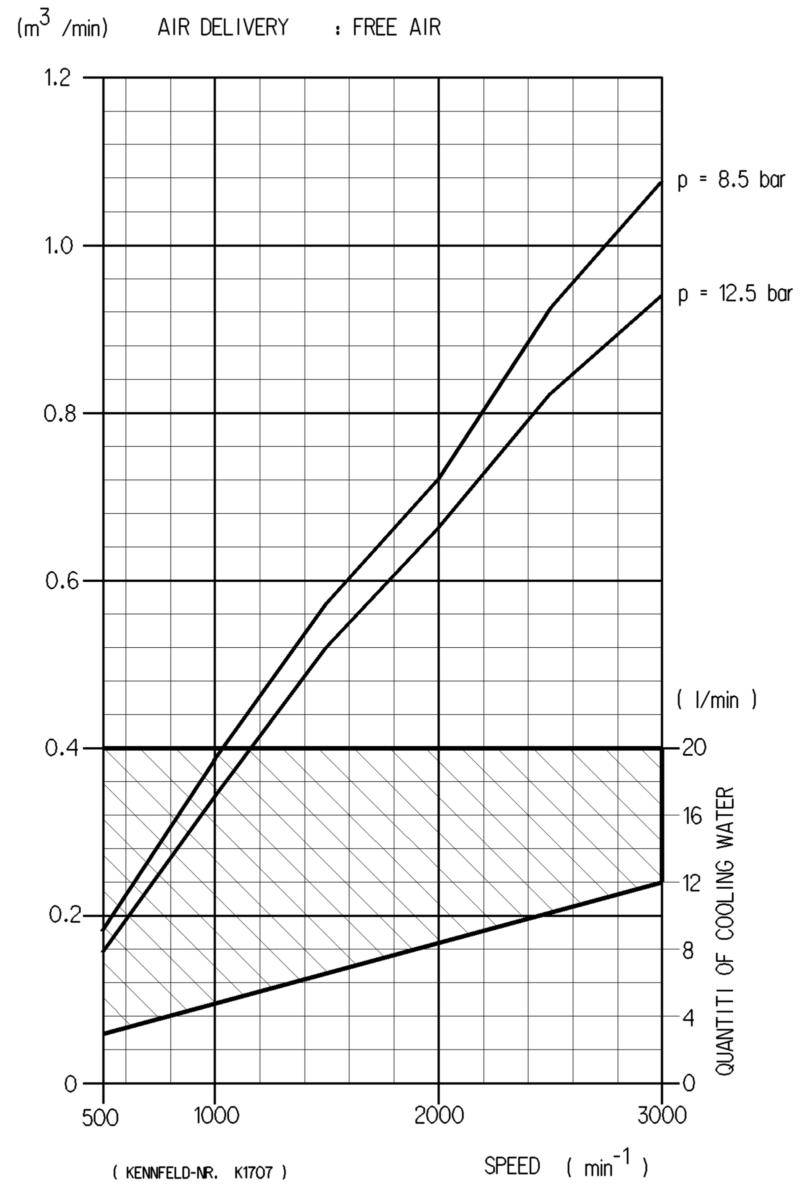

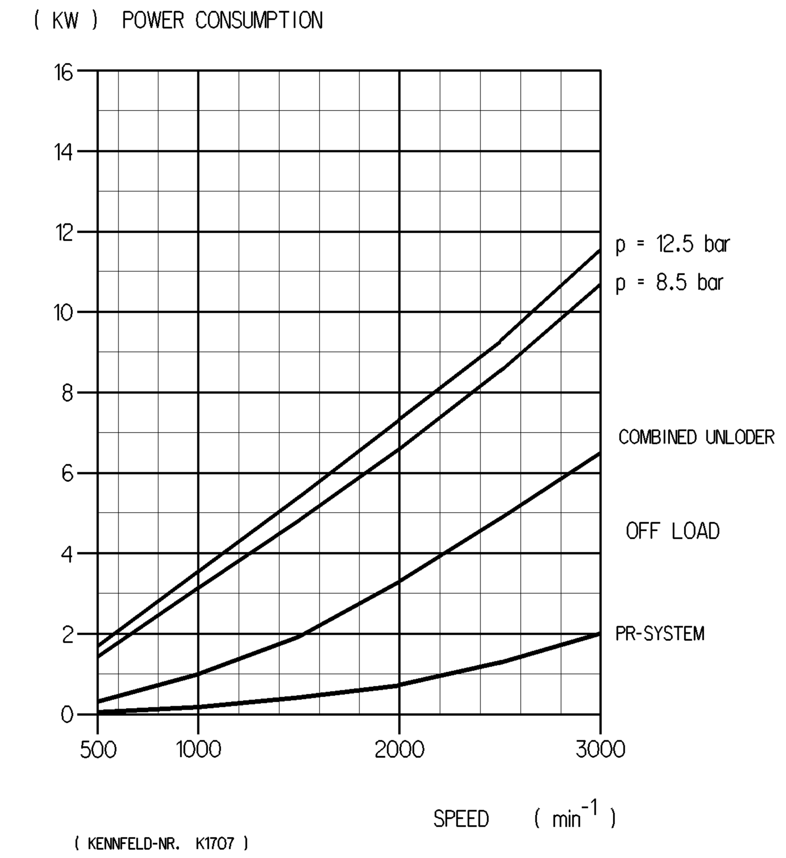

WORKING MEDIUM	AIR
COOLANT	WATER WITH ANTIFREEZE
BORE	Ø 85 mm
STROKE	56 mm
SWEPT VOLUME	636 cm^3
MAX. WORKING SPEED	n_{max} = 3000 min^{-1}
OVERSPEED (TEMPORARILY < 4 SEC.)	n_{ue} = 1.3 x n_{max}
MAX. WORKING PRESSURE	p_e = 12.5 bar
MAX PRESSURE	p_e = 16 bar ⟨2⟩
END PLAY OF CRANKSHAFT	0.08 ... 0.38 mm
LUBRICATION SUPPLIED FROM ENGINE	
PORTS PROTCTED	
FREE FROM ASBESTOS	
CRANKCASE SURFACE PROTECTION	JED-069M1

⟨2⟩ MEASURE AT DISCHARGE PORT

⟨1⟩ CUSTOMER'S LABEL

(...) AUXILIARY DIMENSION

MAX. PERMISSIBLE TILT DURING CONTINUOUS WORKING:

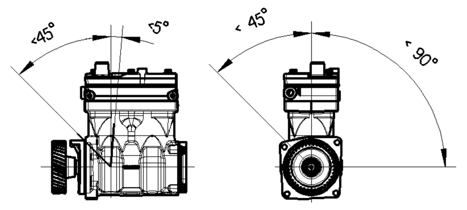

1:2

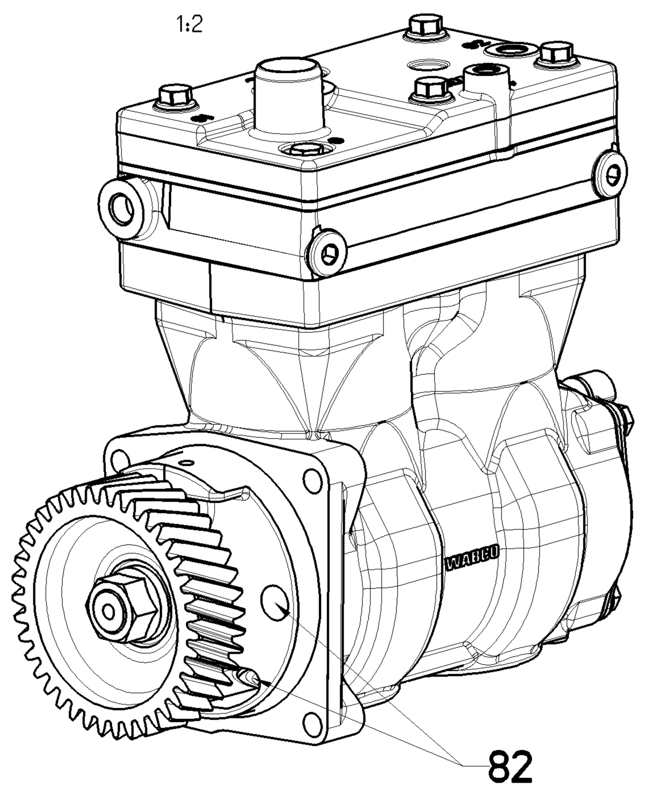

0	INLET PORT	
2	DISCHARGE PORT	M < 100 Nm
4	GOVERNOR PORT	M < 25 Nm
8.1	OIL SUPPLY	
8.2	OIL DRAIN	
9.1 9.2	COOLANT CONNECTON	M =< 35 Nm

91 ⇄ 92 DIRECTIONS OF FLOW

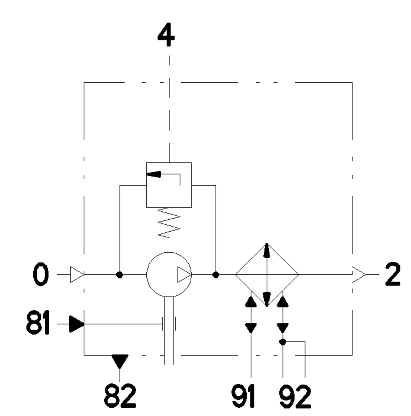

Ø120 f7	-0.036 -0.071
Ø50 H7	+ 0.03 0

General Specification: JED-334-0
Further Technical Data: 912 210 001 0
Doc. Code: 035 | Sheet: 1/5 To 5/5

General Tolerances JED-261

Class 1)		≤ 50	> 50 ≤ 180	> 180 ≤ 400	> 400	
Fine		0.5	1.0	1.5	2.0	±3°
Medium	X	1.0	2.0	3.0	4.0	
Coarse		2.0	3.5	5.0	6.5	

Range of Nominal Dimensions (± mm)

Tapped Holes acc. JED-152

1) Tolerance Class Applied Crossmarked

Copyright WABCO®

Date	Signature
Drawn	
2016-12-02	Trokajlo
Checked	
2016-12-02	Slobodzian
Expert	
	Plonski

WABCO

TWIN CYLINDER COMPRESSOR

Mass	Scale	Material No.	Date of first issue: 2016-12-02		
19,034 KG	1:1	912 510 001 A	Doc.Code 005	Language EN	Sheet 1/1
Size A 0	CAD System CREO	ECN-No. -	Revision - -	Techn. Resp. 2009	Replacement for -

100mm

Toute Communication ou reproduction de ce document, toute exploitation ou communication de son contenu sont interdites, sauf autorisation expresse. Tout manquement à cette règle constitue un abus évident et expose son auteur au versement de dommages et intérets. Tous droits de propriété industrielle reservés, notamment en matière de brevets et de modèles.
Weitergabe sowie Vervielfältigung dieser Unterlage, Verwertung und Mitteilung ihres Inhalts nicht gestattet, soweit nicht ausdrücklich zugestanden. Zuwiderhandlungen stellen einen offensichtlichen Missbrauch dar und verpflichten zu Schadenersatz. Alle Rechte fuer den Fall der Patenterteilung oder Gebrauchsmuster-Eintragung vorbehalten.
Non è permesso consegnare a terzi o riprodurre questo documento, ne utilizzarne il contenuto o renderlo comunque noto a terzi senza autorizzazione esplicita. Ogni infrazione costituira un evidente abuso e comportera il risarcimento dei danni subiti. E'fatta riserva di tutti i diritti derivanti da brevetti o da modelli.
Copying of this document and giving it to others and the use or communication of the contents thereof, are forbidden without express authority. Contravention of this restriction will constitute an evident abuse and result in a liability to the payment of damages. All rights are reserved in the event of the grant of patent or registration of a utility model or design. This document is the subject of copyright.