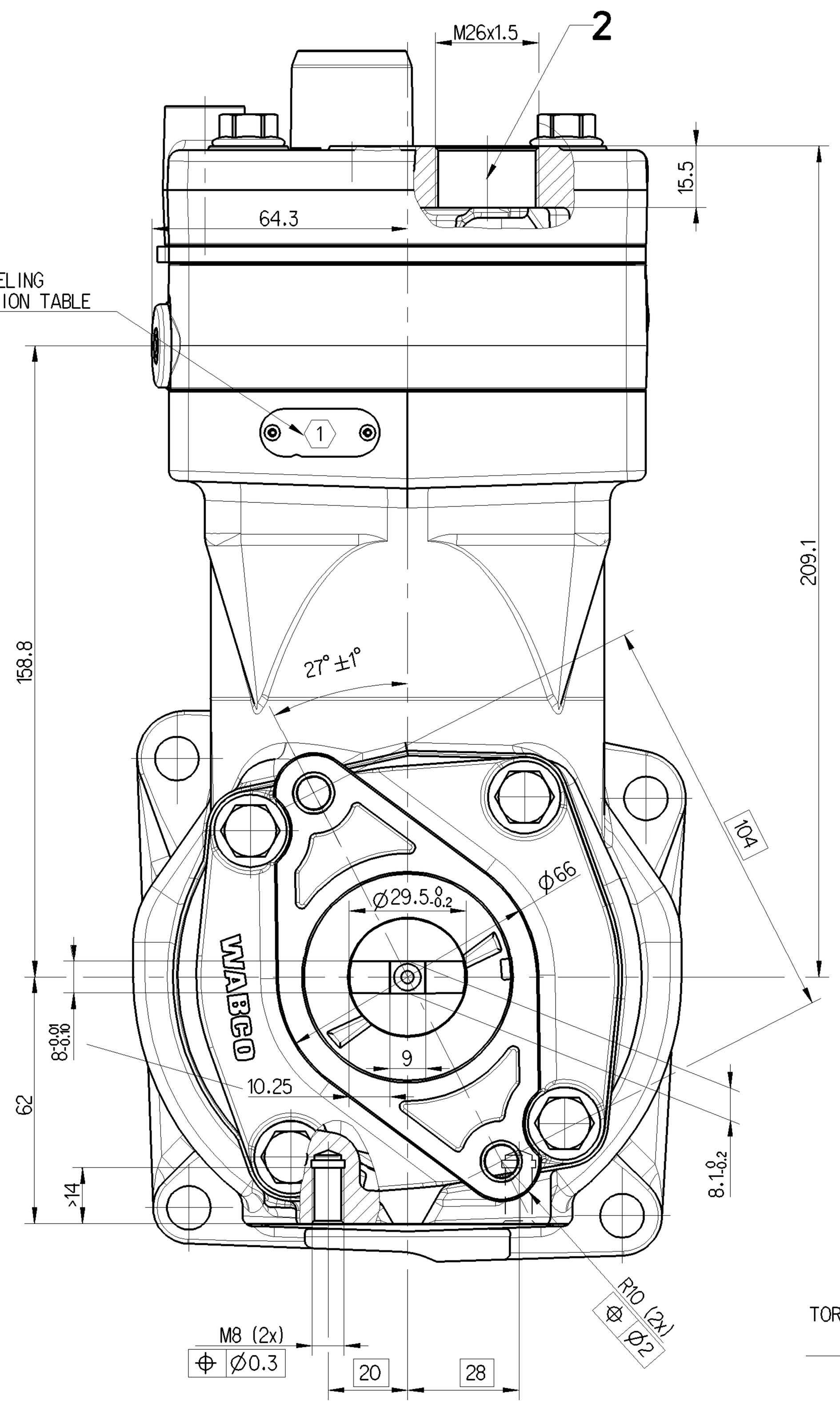

SEE: LABELING INFORMATION TABLE

TORQUE: 250 +40/0 Nm LEFT HAND

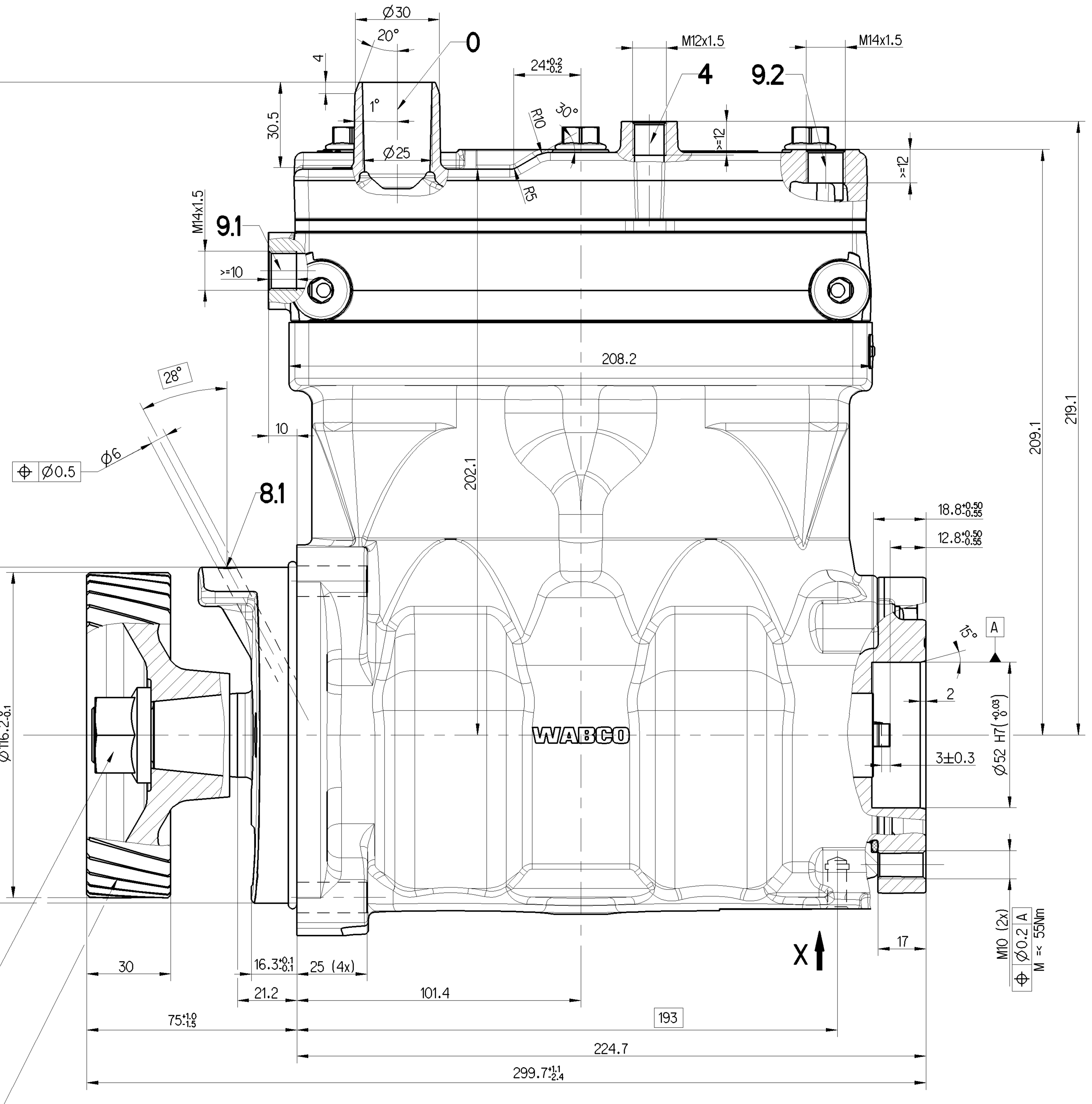

895 905 169 4 (WABCO)
A 906 132 03 05 (DAIMLER)
ALTERNATIVE USE OF GEAR :
912 510 160 4 (WABCO)
ALLOWED.

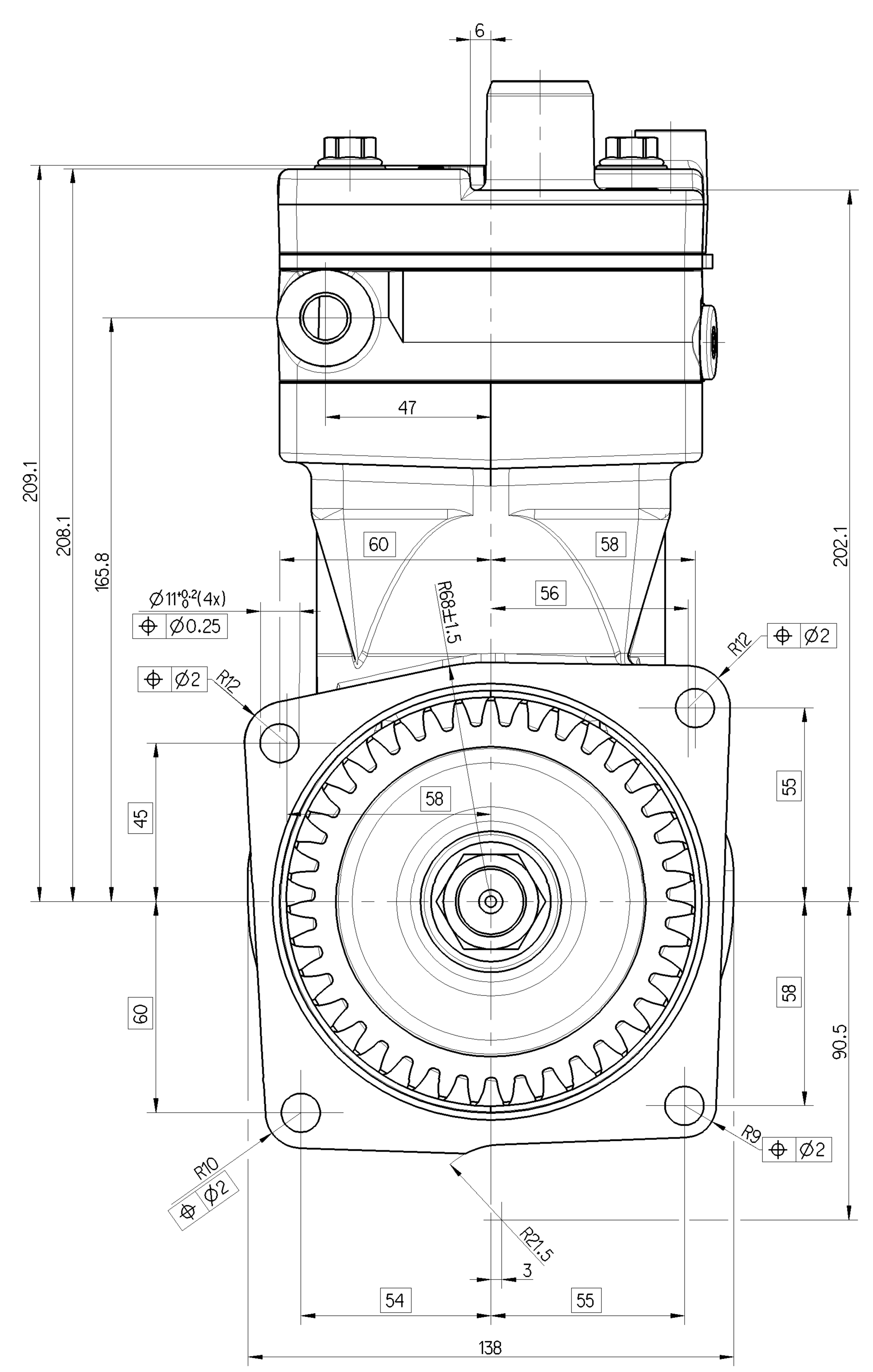

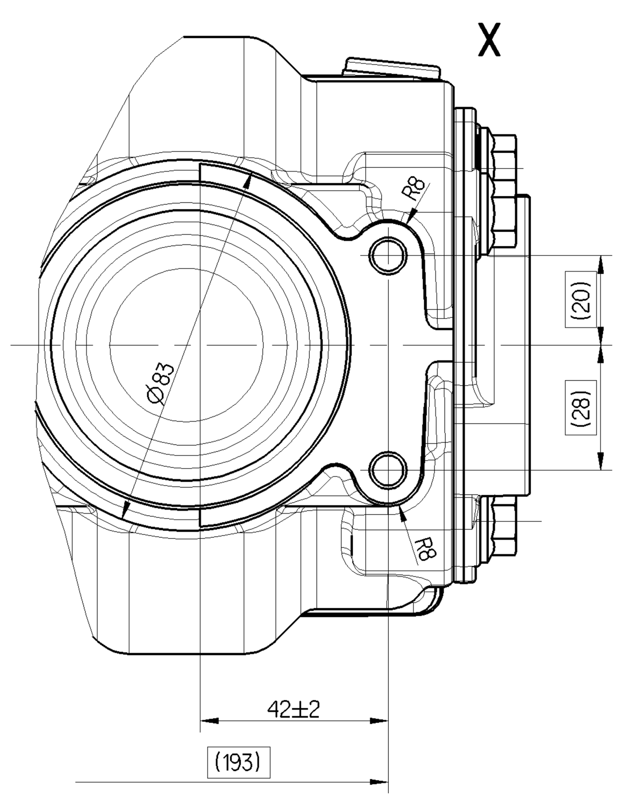

O-RING (Ø118±1 x Ø3±0.1)
897 772 857 4 (WABCO/JED-313 = (ACM)/SHORE A 70±5)
(DAIMLER / DBL 6038.20 = ELASTOMER/SHORE A 70±5)

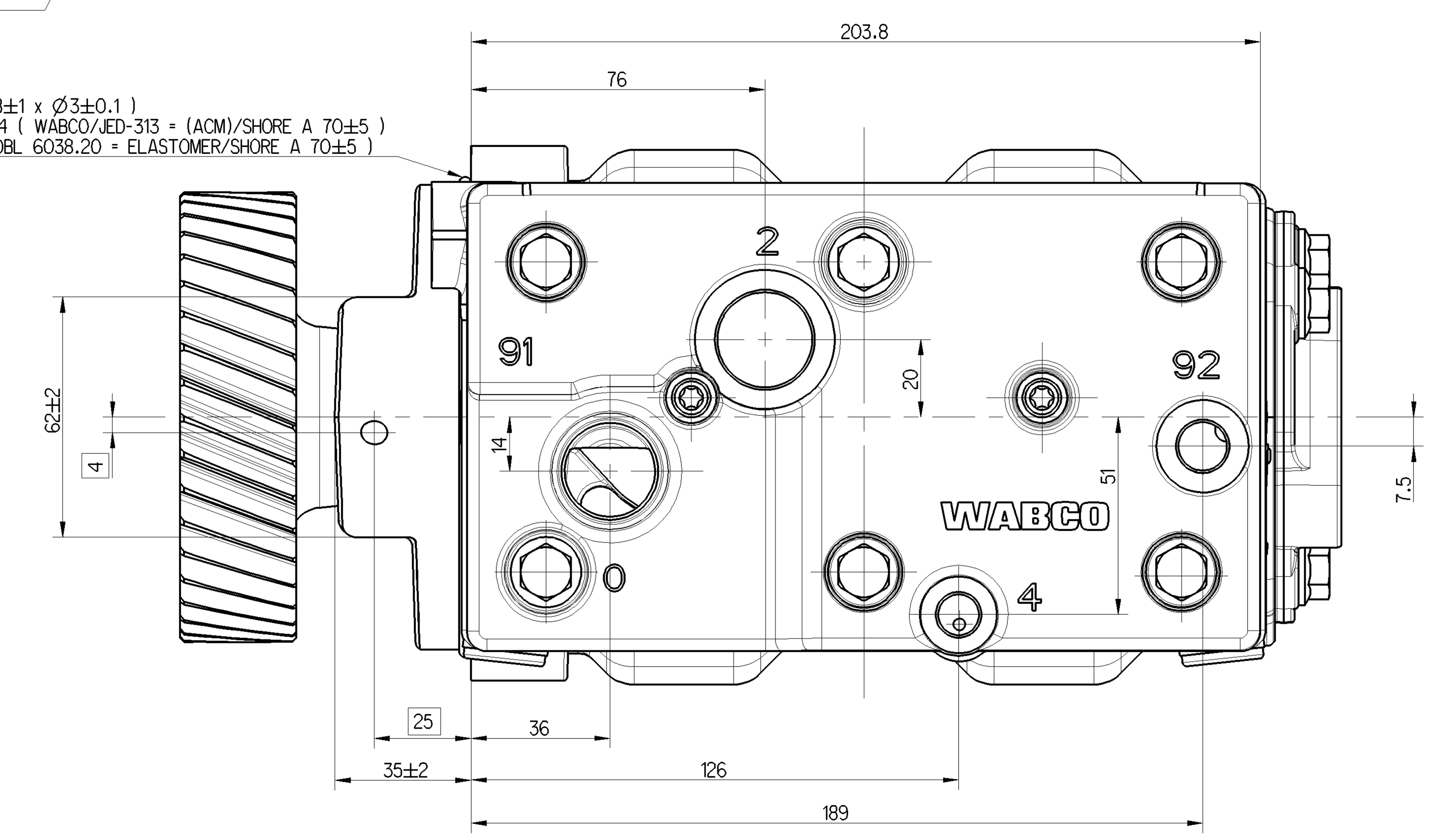

WORKING MEDIUM	AIR
COOLANT	WATER WITH ANTIFREEZE
BORE	Ø 85 mm
STROKE	56 mm
SWEPT VOLUME	636 cm^3
MAX. WORKING SPEED	n_{max} = 3000 min^{-1}
OVERSPEED (TEMPORARILY < 4 SEC.)	n_{ue} = 1.3 x n_{max}
END PLAY OF CRANKSHAFT	0.08 ... 0.38 mm
MAX. WORKING PRESSURE	p_e = 12.5 bar
MAX PRESSURE	p_e = 16 bar ⟨2⟩
LUBRICATION SUPPLIED FROM ENGINE	
PORTS PROTCTED	
FREE FROM ASBESTOS	
CRANKCASE SURFACE PROTECTION	JED-069M1

⟨2⟩ MEASURE AT DISCHARGE PORT

MAX. PERMISSIBLE TILT DURING CONTINUOUS WORKING:

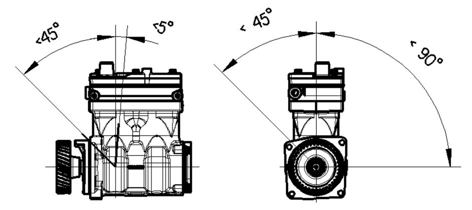

1:2

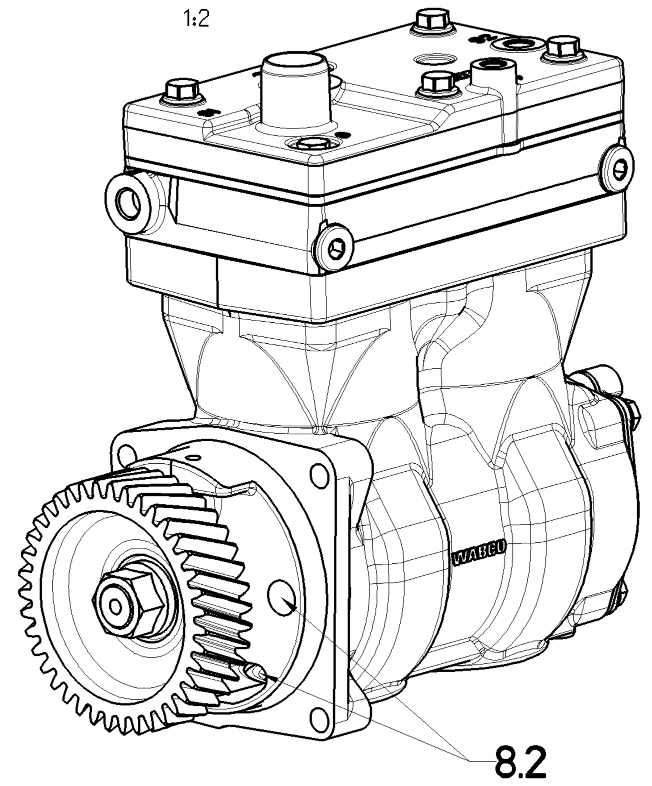

0	INLET PORT	
2	DISCHARGE PORT	M < 100 Nm
4	GOVERNOR PORT	M < 25 Nm
8.1	OIL SUPPLY	
8.2	OIL DRAIN	
9.1 9.2	COOLANT CONNECTON	M =< 35 Nm

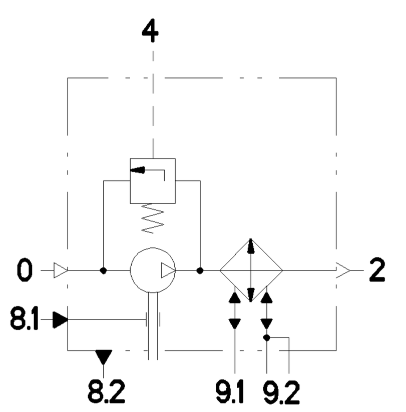

9.1 ⇄ 9.2 DIRECTIONS OF FLOW

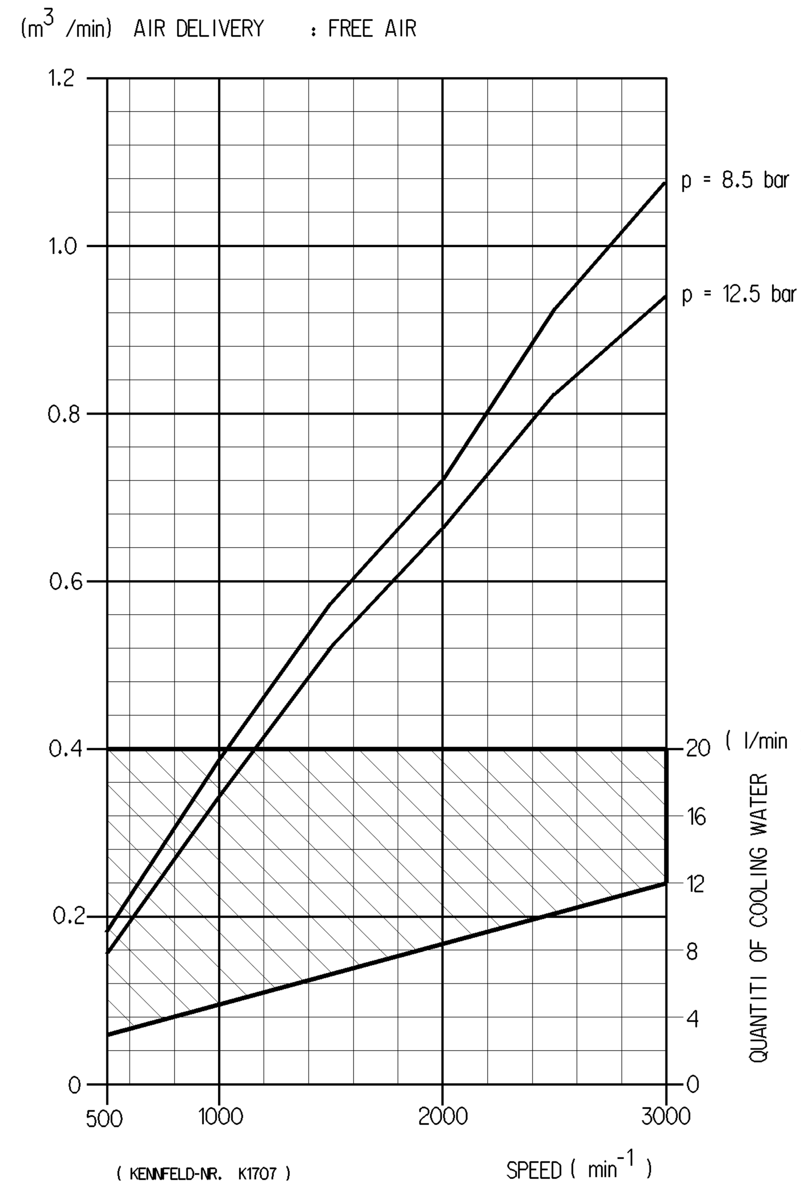

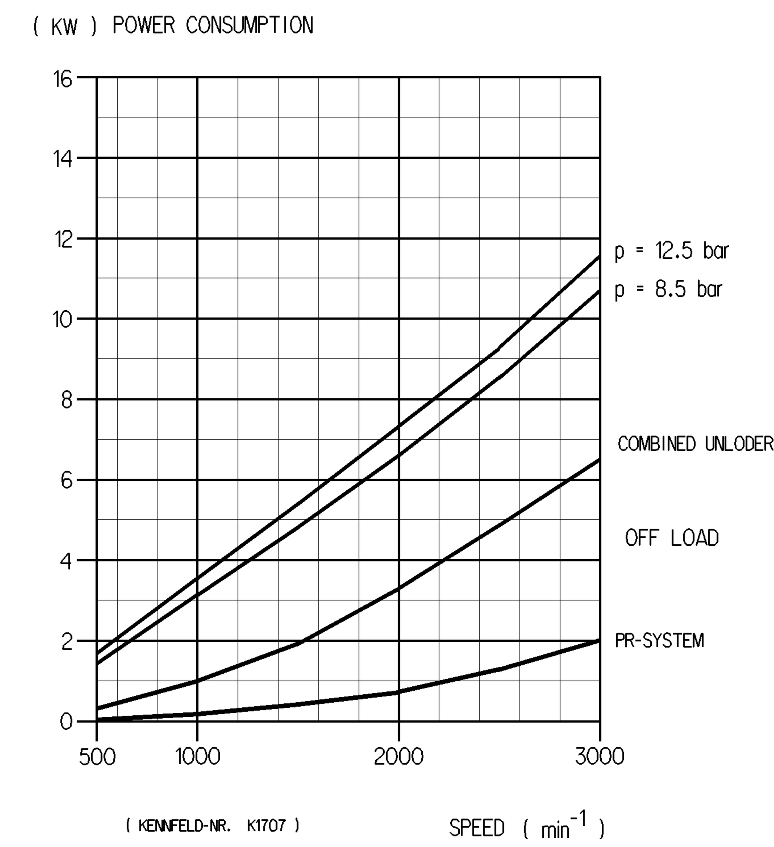

(...) AUXILIARY DIMENSION

** ALSO VALID FOR PRI: 037, 003, 105, 008.

LABELING INFORMATION TABLE (SEE ALSO DOC.922)

PRODUCTION SITE	LABEL	LABEL ID NUMBER	LABEL LAYOUT
048 **	⟨1⟩	899 050 145 4	PRODUCTION DATE / WABCO ID NUMBER

General Specification: JED-334-0						
Further Technical Data: 912 210 001 0						
Doc. Code: 035			Sheet: 1 To 5			
General Tolerances JED-261						
Class 1)		Range of Nominal Dimensions (± mm) ≤ 50	> 50 ≤ 180	> 180 ≤ 400	> 400	∢
Fine		0.5	1.0	1.5	2.0	
Medium	X	1.0	2.0	3.0	4.0	±3°
Coarse		2.0	3.5	5.0	6.5	
Tapped Holes acc. JED-152						
1) Tolerance Class Applied Crossmarked						

Date	Signature	
Drawn		
2017-03-06	Trokajlo	
Checked		
2017-03-08	Slobodzian	
Expert	Bruns	

Copyright WABCO®

WABCO
TWIN CYLINDER COMPRESSOR

Mass	Scale	Material No.	Date of first issue: 2017-03-08		
19,034 KG	1:1 1:2	912 510 001 R	Doc.Code 005	Language EN	Sheet 1/1
Size A 0	CAD System CREO	ECN-No. -	Revision - -	Techn. Resp. 2009	Replacement for -

Toute Communication ou reproduction de ce document, toute exploitation ou communication de son contenu sont interdites, sauf autorisation expresse. Tout manquement à cette règle constitue un abus évident et expose son auteur au versement de dommages et intérêts. Tous droits de propriété industrielle reservés, notamment en matière de brevets et de modèles.
Non è permesso consegnare a terzi o riprodurre questo documento, ne utilizzarne il contenuto o renderlo comunque noto a terzi senza autorizzazione esplicita. Ogni infrazione costituira un evidente abuso e comportera il risar cimento dei danni subiti. E'fatto riserva di tutti i diritti derivanti da brevetti o modelli.
Weitergabe sowie Vervielfältigung dieser Unterlage, Verwertung und Mitteilung ihres Inhalts nicht gestattet, soweit nicht ausdrücklich zugestanden. Zuwiderhandlungen stellen einen offensichtlichen Missbrauch dar und verpflichten zu Schadenersatz. Alle Rechte fuer den Fall der Patenterteilung oder Gebrauchsmuster-Eintragung vorbehalten.
Copying of this document and giving it to others and the use or communication of the contents thereof, are forbidden without express authority. Contravention of this restriction will constitute an evident abuse and result in a liability to the payment of damages. All rights are reserved in the event of the grant of patent or registration of a utility model or design. This document is the subject of copyright.