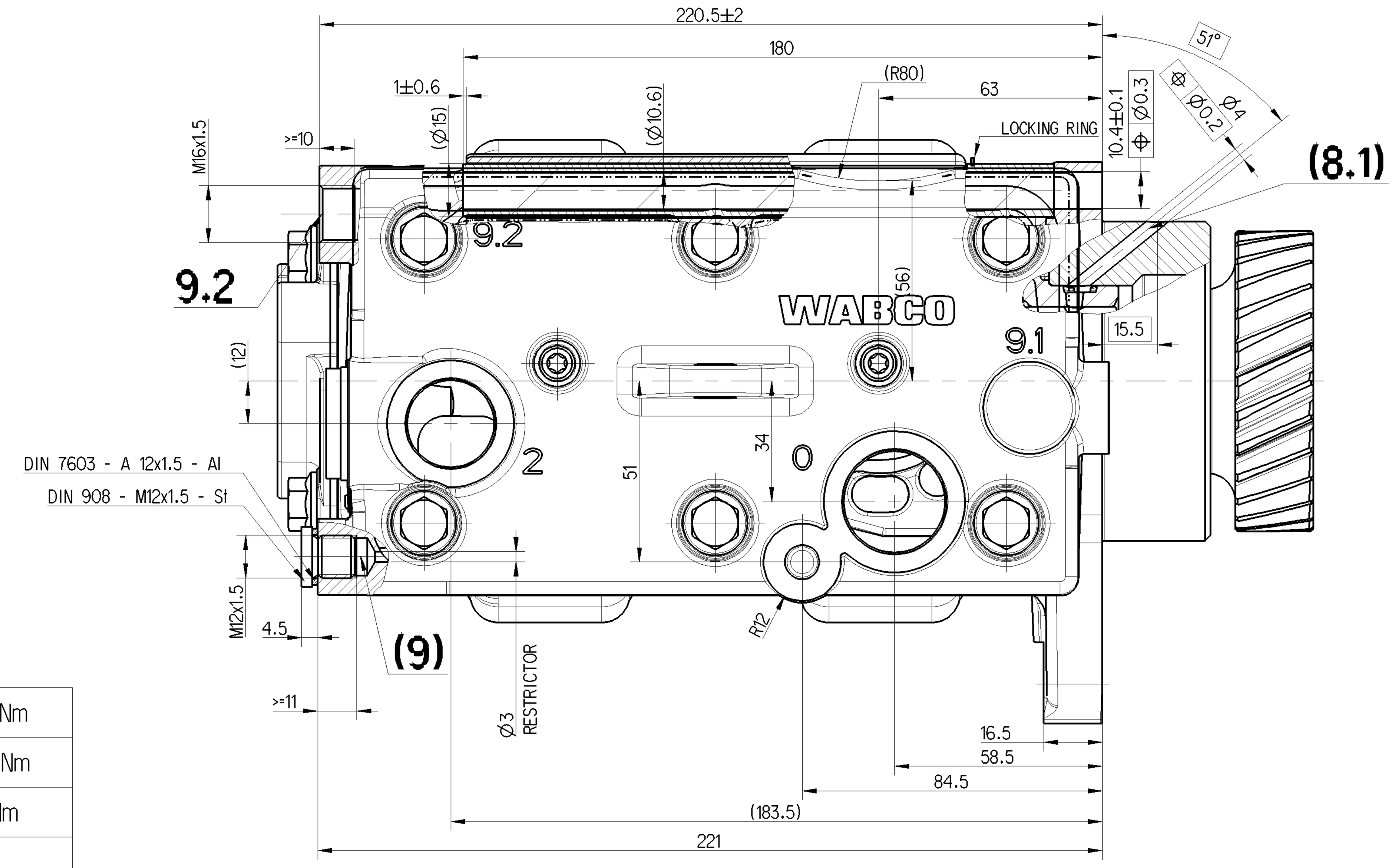

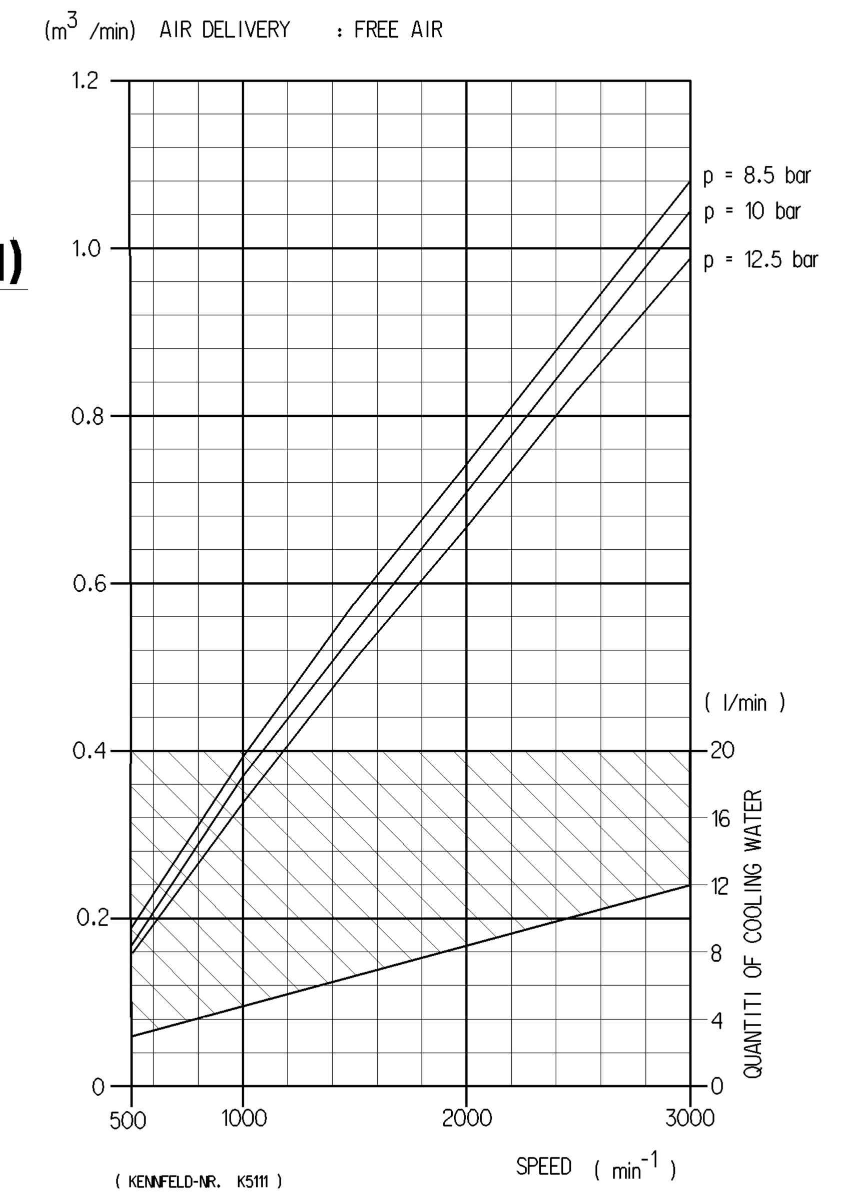

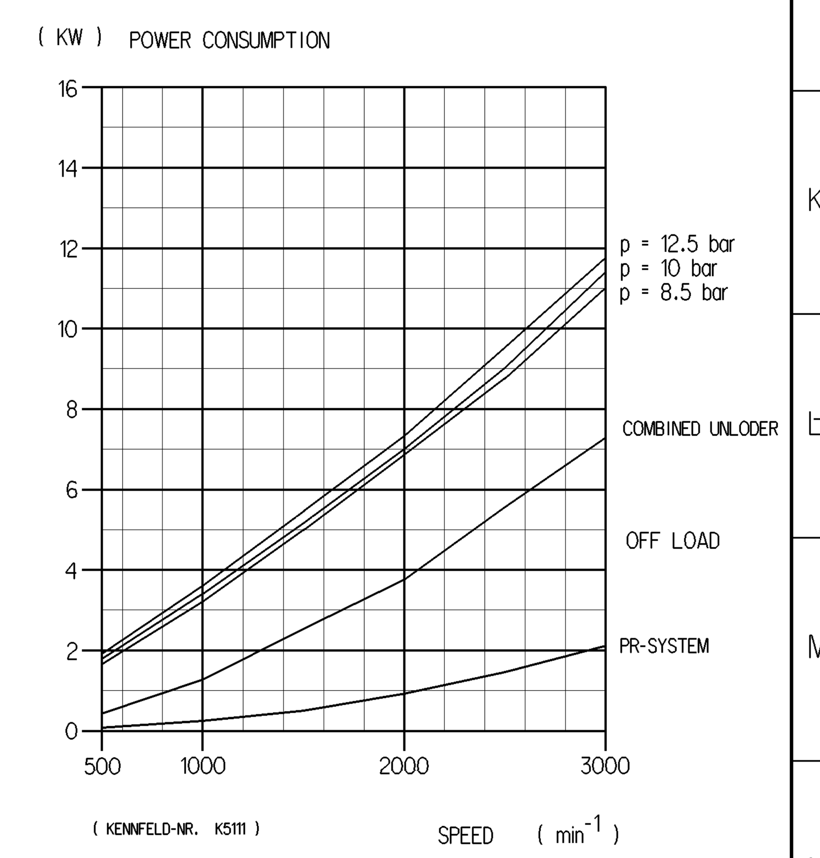

WORKING MEDIUM	AIR
COOLANT	WATER WITH ANTIFREEZE
BORE	Ø 85 mm
STROKE	56 mm
SWEPT VOLUME	636 cm^3
MAX. WORKING SPEED	n_{max} = 3000 min^{-1}
OVERSPEED (MAX. 4 SEC.)	n_{ue} = 1.3 x n_{max}
MAX. WORKING PRESSURE	12.5 bar
MAX. PRESSURE	16 bar
END PLAY OF CRANKSHAFT	0.1 ... 0.45
LUBRICATION SUPPLIED FROM ENGINE	
PORTS PROTECTED	
FLANGE SEALING	
SURFACE PROTECTION JED-762	

0	SUCTION PORT	M < 120 Nm
21/22	DISCHARGE PORT	M < 100 Nm
4	GOVERNOR PORT	M < 25 Nm
8.1	OIL SUPPLY	
8.2	OIL DRAIN	
9.1 9.2	COOLANT CONNECTION	M =< 35 Nm
(9)	VENTING PORT	M < 25 Nm

9.1 ⇄ 9.2 DIRECTIONS OF FLOW

MAX. PERMISSIBLE TILT DURING CONTINUOUS WORKING

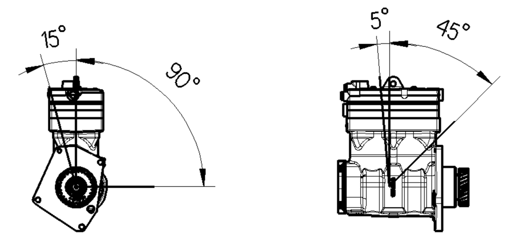

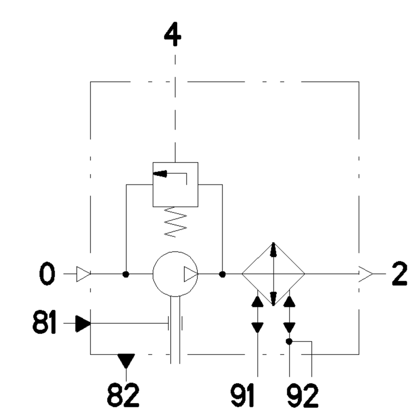

(...) AUXILIARY DIMENSION

1 CUSTOMER'S LABEL

General Specification: JED-334-1, Size ISO 14405 LP						
Further Technical Data: 912 510 200 0						
Doc. Code: 035	Sheet: 1 To 5					
General Tolerances JED-261						
Class 1)	≤ 50	> 50 ≤ 180	> 180 ≤ 400	> 400		
Fine		0.5	1.0	1.5	2.0	
Medium	X	1.0	2.0	3.0	4.0	±3°
Coarse		2.0	3.5	5.0	6.5	
Tapped Holes acc.						
1) Tolerance Class Applied Crossmarked						

Copyright WABCO®		WABCO
Date	Signature	COMPRESSOR
Drawn: 2017-02-27	Trokajlo	
Checked: 2017-02-27	Slobodzian	
Expert	Trokajlo	
Mass: 20.791 KG	Scale: 1:1	Material No.: 912 510 200 A
Size: A 0	CAD System: CREO	

Date of first issue	Doc.Code	Language	Sheet	ECN-No.	Revision	Techn. Resp.	Replacement for
2016-12-02	005	EN	1/1	173318	A 1	2009	-

Copying of this document and giving it to others and the use or communication of the contents thereof, are forbidden without express authority. Contravention of this restriction will constitute an evident abuse and result in a liability to the payment of damages. All rights are reserved in the event of the grant of patent or registration of a utility model or design. This document is the subject of copyright.