WORKING MEDIUM	AIR
COOLANT	WATER WITH ANTIFREEZE
BORE	Ø 85 mm
STROKE	56 mm
SWEPT VOLUME	636 cm^3
MAX. WORKING SPEED	n_{max} = 3000 min^{-1}
OVERSPEED (MAX. 4 SEC.)	n_{ue} = 1.3 x n_{max}
MAX. WORKING PRESSURE	p_e = 14 bar (2)
MAX. PRESSURE (TEMPORARILY MAX. 4 SEC.)	p_e = 16 bar (2)
END PLAY OF CRANKSHAFT	0.1 ... 0.4 mm
LUBRICATION SUPPLIED FROM ENGINE	

(2) MEASURING POINT AT DISCHARGE PORT

MAX. PERMISSIBLE TILT DURING CONTINUOUS WORKING

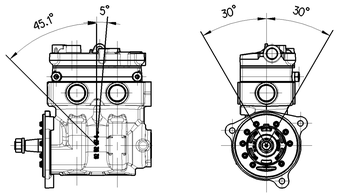

0	SUCTION PORT	
2	DISCHARGE PORT	M <= 150 Nm
4	GOVERNOR PORT	M <= 25 Nm
8.1	OIL SUPPLY	M <= 25 Nm
8.2	OIL DRAIN	
9.1 - 9.4	COOLANT CONNECTIONS	M <= 35 Nm

9.1.◁—▷**9.2** ➡ **9.3.**◁—▷**9.4** DIRECTION OF FLOW

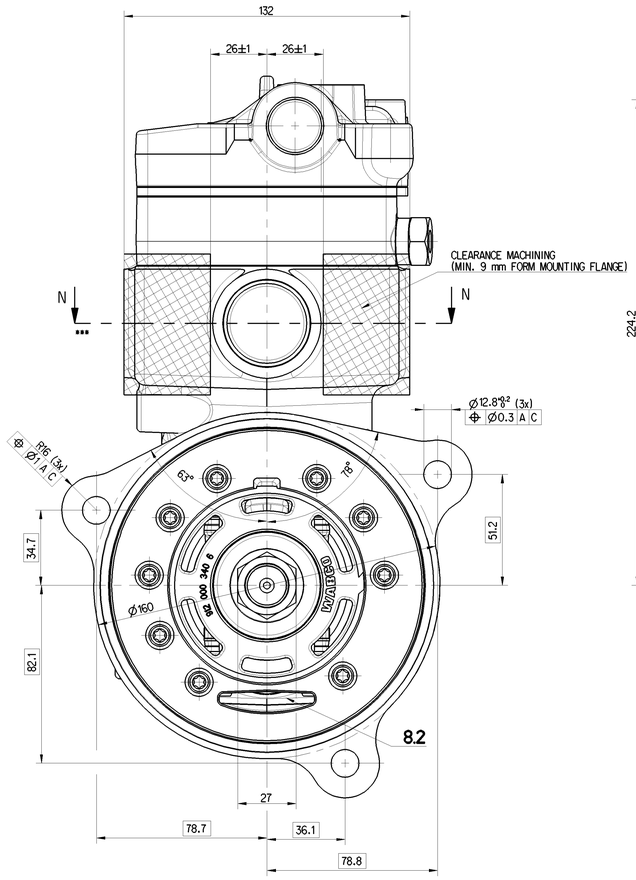

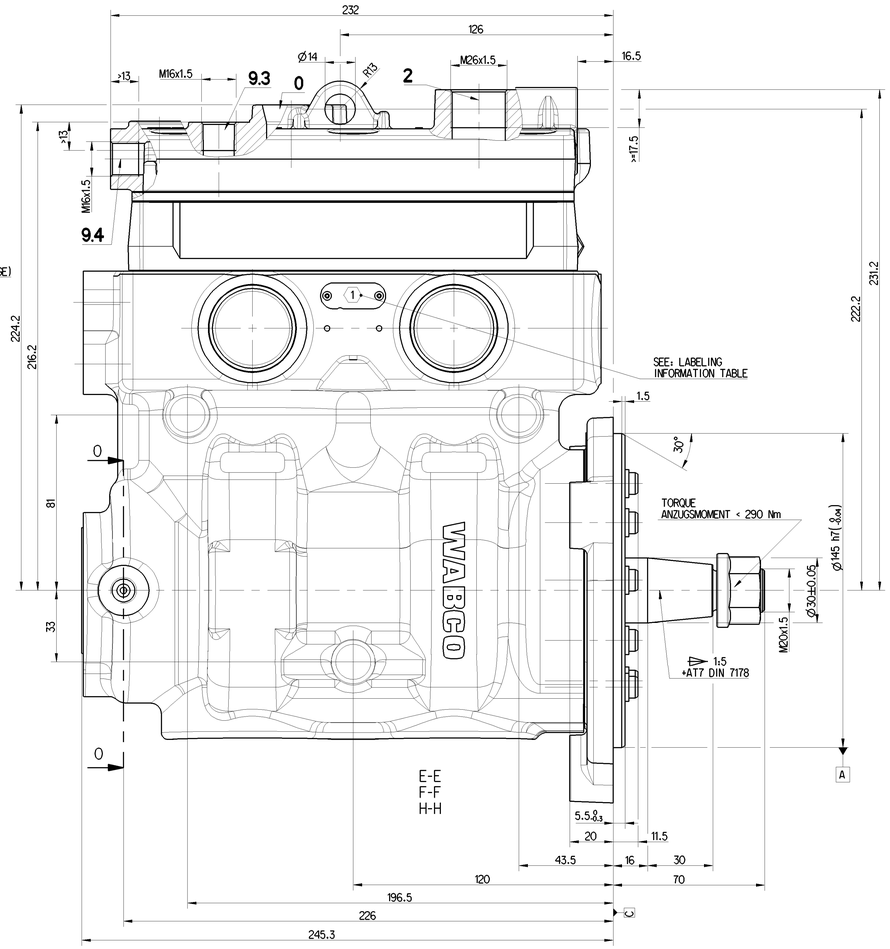

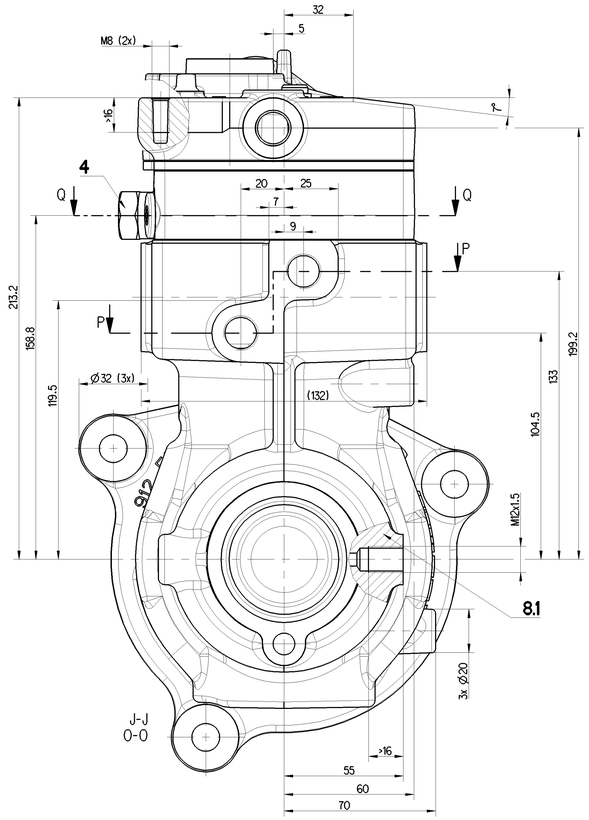

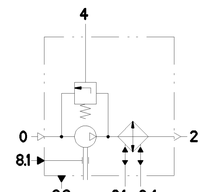

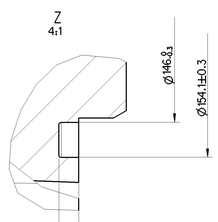

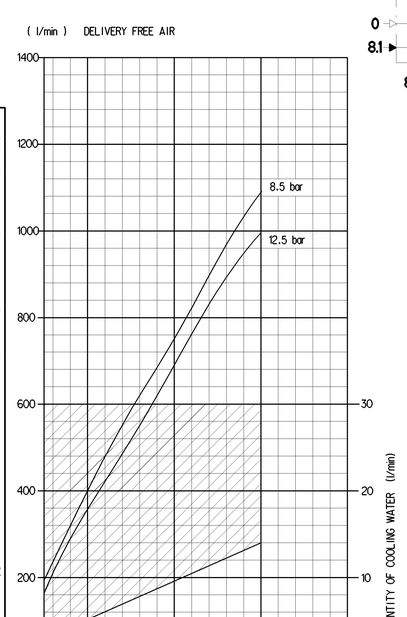

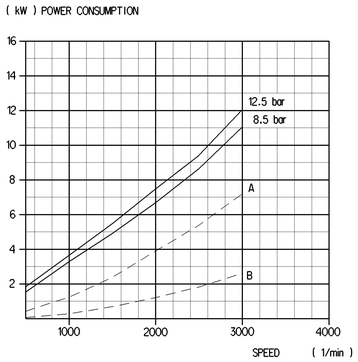

- - - - - OFF LOAD

A) COMBINED UNLOADER

B) PR-SYTEM

(Kennfeld-Nr. K0708)

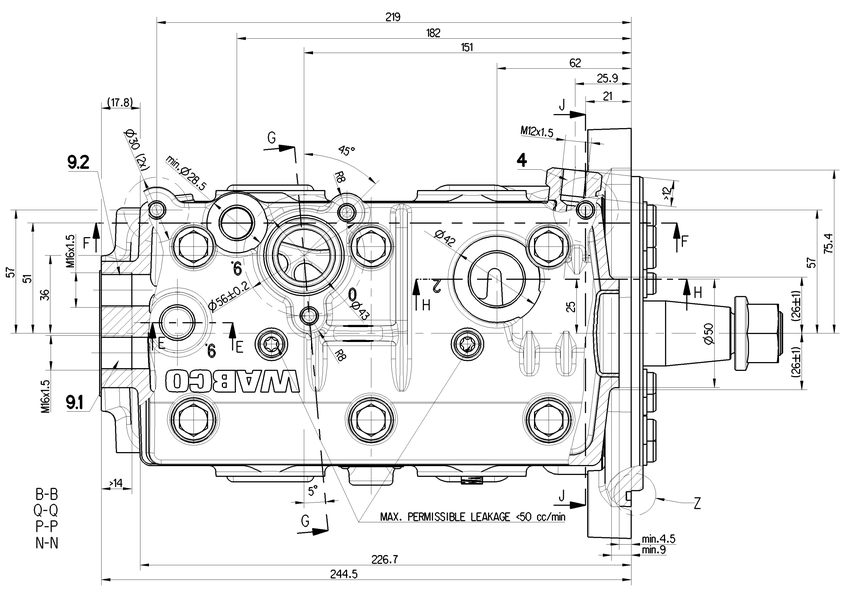

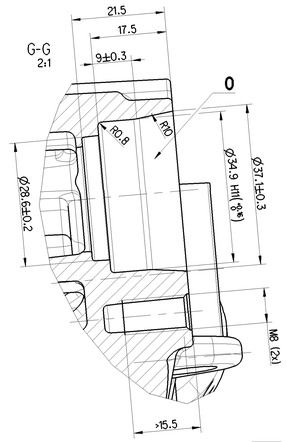

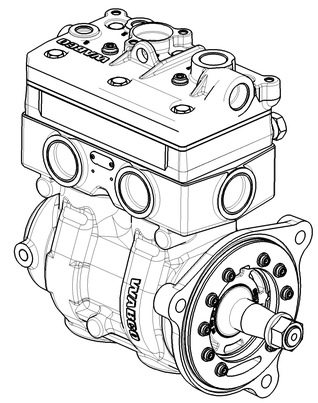

COMPRESSOR WITH OPTIMIZED PISTON

** ALSO VALID FOR PRI: 037, 003

LABELING INFORMATION TABLE (SEE ALSO DOC.922)

PRODUCTION SITE	LABEL	LABEL ID NUMBER	LABEL LAYOUT
PRI 048 **	(1)	899 050 145 4	PRODUCTION DATE WABCO ID NUMBER

General Specification: JED-334-0			
Further Technical Data: 912 512 015 R			
Doc. Code: 035	Sheet: 1 To 9		
General Tolerances JED-261			
Class (1)	Range of Nominal Dimensions (in mm) ≤ 50	> 50 ≤ 180	> 180 ≤ 400	> 400	∡
Fine	0.5	1.0	1.5	2.0	±3°
Medium X	1.0	2.0	3.0	4.0	
Coarse	2.0	3.5	5.0	6.5	
Tapped Holes acc. JED-152					
(1) Tolerance Class Applied Crossmarked					

Copyright WABCO®

	Date	Signature
Drawn	2018-08-29	Zygodlo
Checked	2018-09-26	Skebedzian
Esaed	Zygodlo	

WABCO

TWIN CYLINDER COMPRESSOR

Mass	Scale	Material No.	Date of first issue: 2018-09-26		
21.313 kg	1:1	912 512 015 R	Doc.Code	Language	Sheet
			005	EN	1/1
Size	CAD System	ECN-No.	Revision	Index. Repl.	Replacement for
A 0	CREO	-	- -	2009	-

100mm