WORKING MEDIUM	AIR
COOLANT	WATER WITH ANTIFREEZE
BORE	Ø 85 mm
STROKE	56 mm
SWEPT VOLUME	636 cm^3
MAX. WORKING SPEED	n_{max} = 3000 min^{-1}
OVERSPEED (MAX. 4 SEC.)	n_{ue} = 1.3 x n_{max}
MAX. WORKING PRESSURE	p_e = 14 bar (2)
MAX. PRESSURE (TEMPORARILY MAX. 4 SEC.)	p_e = 16 bar (2)
END PLAY OF CRANKSHAFT	0.1 ... 0.4 mm
LUBRICATION SUPPLIED FROM ENGINE	

(2) MEASURING POINT AT DISCHARGE PORT

MAX. PERMISSIBLE TILT DURING CONTINUOUS WORKING

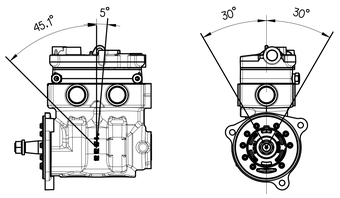

0	SUCTION PORT	
2	DISCHARGE PORT	M <= 150 Nm
4	GOVERNOR PORT	M <= 25 Nm
8.1	OIL SUPPLY	M <= 25 Nm
8.2	OIL DRAIN	
9.1 - 9.4	COOLANT CONNECTIONS	M <= 35 Nm

9.1 ◁—▷ 9.2 ➡ 9.3 ◁—▷ 9.4 DIRECTION OF FLOW

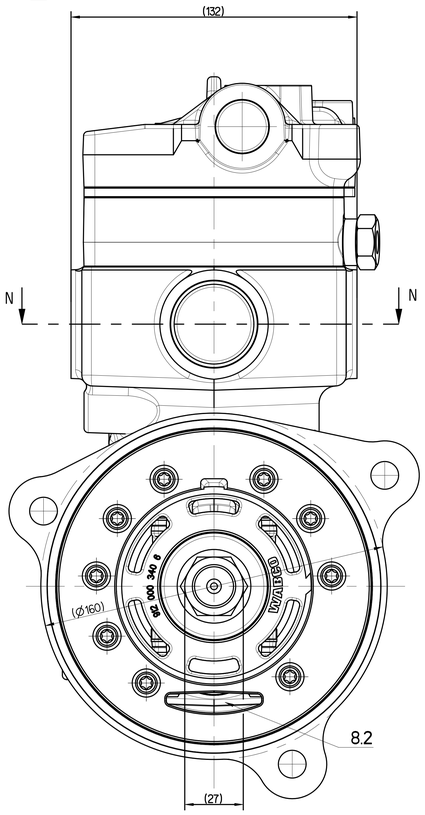

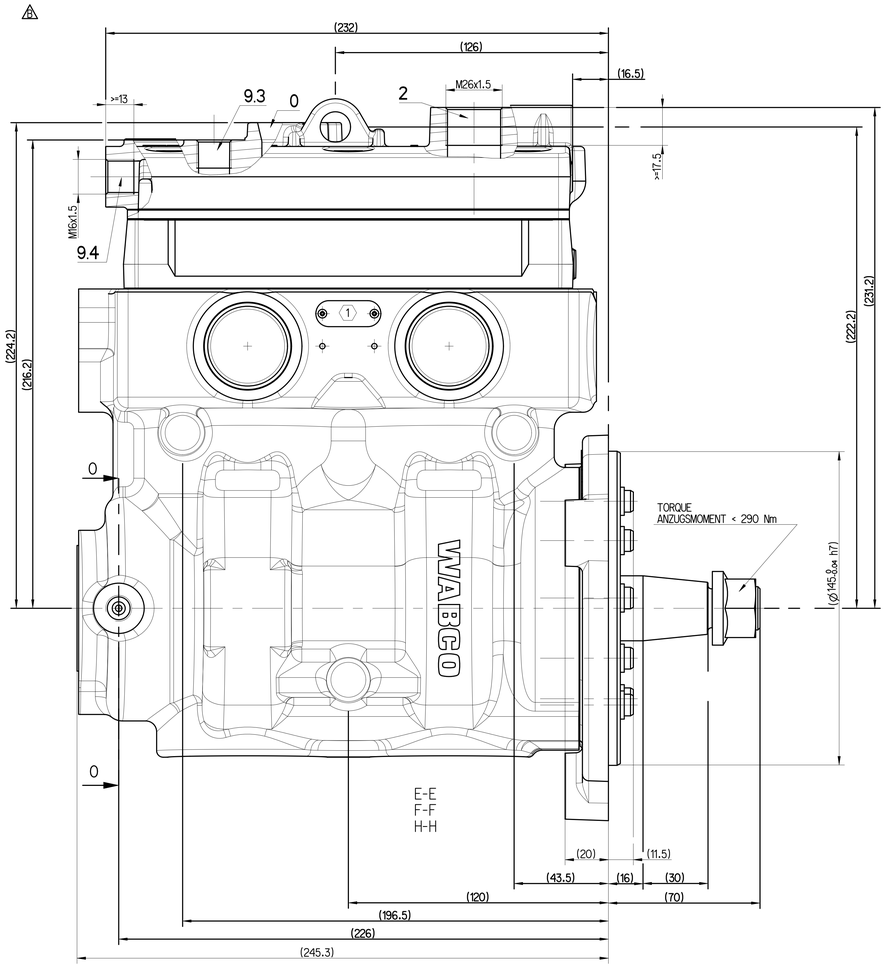

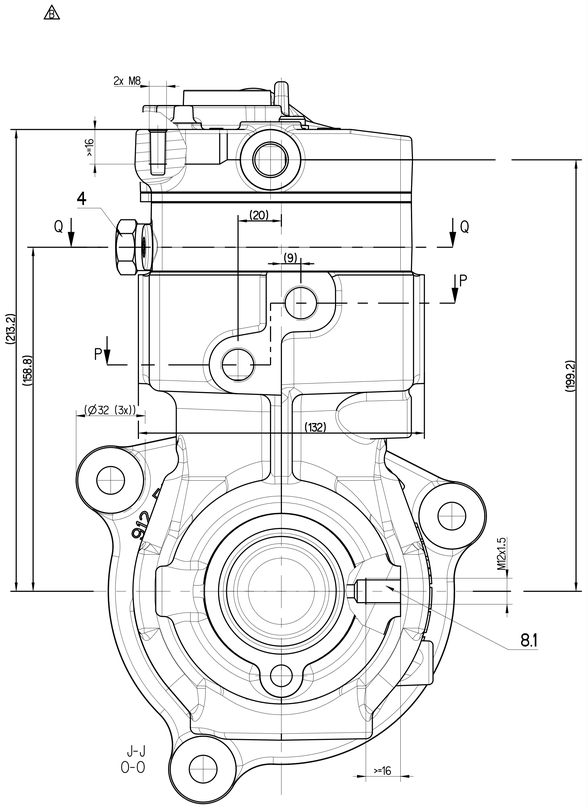

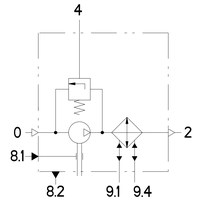

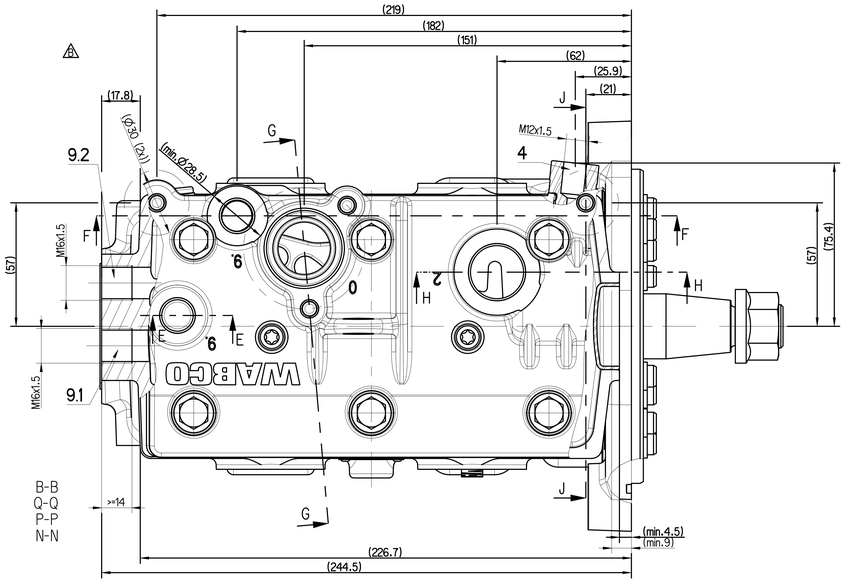

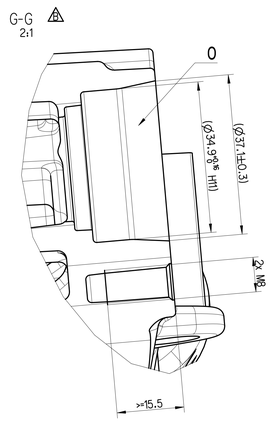

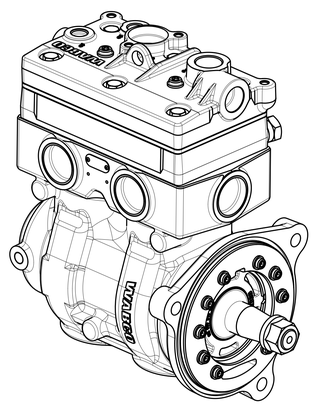

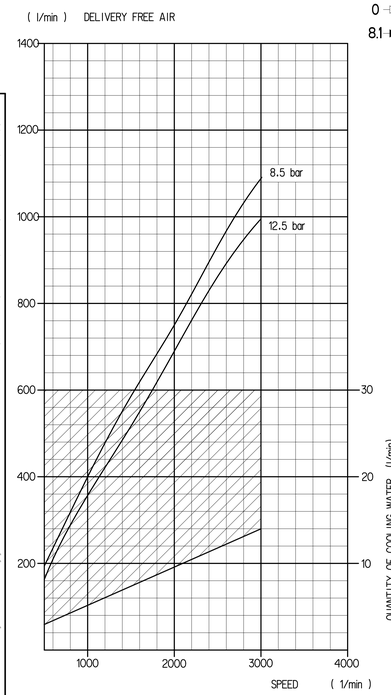

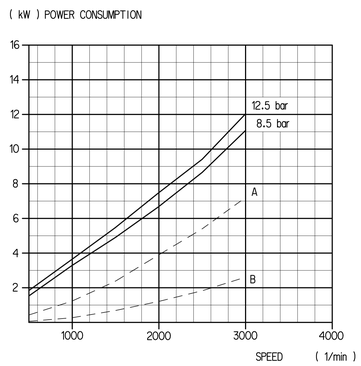

- - - - OFF LOAD

A) COMBINED UNLOADER

B) PR-SYTEM

(Kennfeld-Nr. K0708)

LABELING INFORMATION TABLE (SEE ALSO DOC.922)			
PRODUCTION SITE	LABEL	LABEL ID NUMBER	LABEL LAYOUT
PRI 048	(1)	899 050 145 4	PRODUCTION DATE / WABCO ID NUMBER

General Specifications: ISO 8015, JED-3341-1, Size ISO 14405 LP									
Further Technical Data: 912 512 015 R									
Doc. Code: 035				Sheet: 1		To 9			
General Tolerances JED-261									
		Range of nominal dimensions in mm							
Class	1)	≤ 50	> 50 ≤ 180	> 180 ≤ 400	> 400				
Fine		±0.5	±1	±1.5	±2				
Medium	X	±1	±2	±3	±4	±3°			
Coarse		±2	±3.5	±5	±6.5				
Trapped Holes acc.: O									
1): Tolerance Class Applied Crossmarked									

Copyright ZF®

Date	Signature
Drawn 2025-08-26	Ołowocz
Checked 2025-08-26	Matyja

TWIN CYLINDER COMPRESSOR

Mass	Scale	Material No.	Date of first issue: 2018-09-26
21.317 kg	1:1	912 512 015 R	Doc.-Code 005 / Language EN / Sheet 1/1
Size A 0	CAD System CREO		
EN-No. 519291	Revision 5x B	Techn. Resp. 5010_RM	Replacement for -

100mm

Tale documento la riproduzione ed uso del medesimo, tale esclusione la comunicazione ad altri soggetti, salvo diverso accordo scritto. Il presente documento, con le informazioni ivi contenute, non può essere usato per scopi diversi da quelli per i quali è stato inoltrato. Qualora la richiesta di offerta, ordine o contratto non venga perfezionata, il presente documento dovrà essere restituito su richiesta della ZF Lemförde GmbH.

Übergabe sowie Vervielfältigung dieses Dokuments, Verwertung und Mitteilung des Inhalts sind untersagt, soweit nicht ausdrücklich zugestanden. Zuwiderhandlungen verpflichten zu Schadenersatz. Es ist unerheblich, ob es sich um gewerbliche oder sonstige Schutzrechte handelt. Die Weitergabe dieser Unterlagen an Dritte bedarf der vorherigen schriftlichen Zustimmung der ZF Lemförde GmbH.

Copyright ZF Lemförde GmbH. Reproduction, distribution and use of this document as well as the communication of its contents to others without express authorization is prohibited. Offenders will be held liable for the payment of damages. All rights are reserved in the event of the grant of a patent or the registration of a utility model or design.