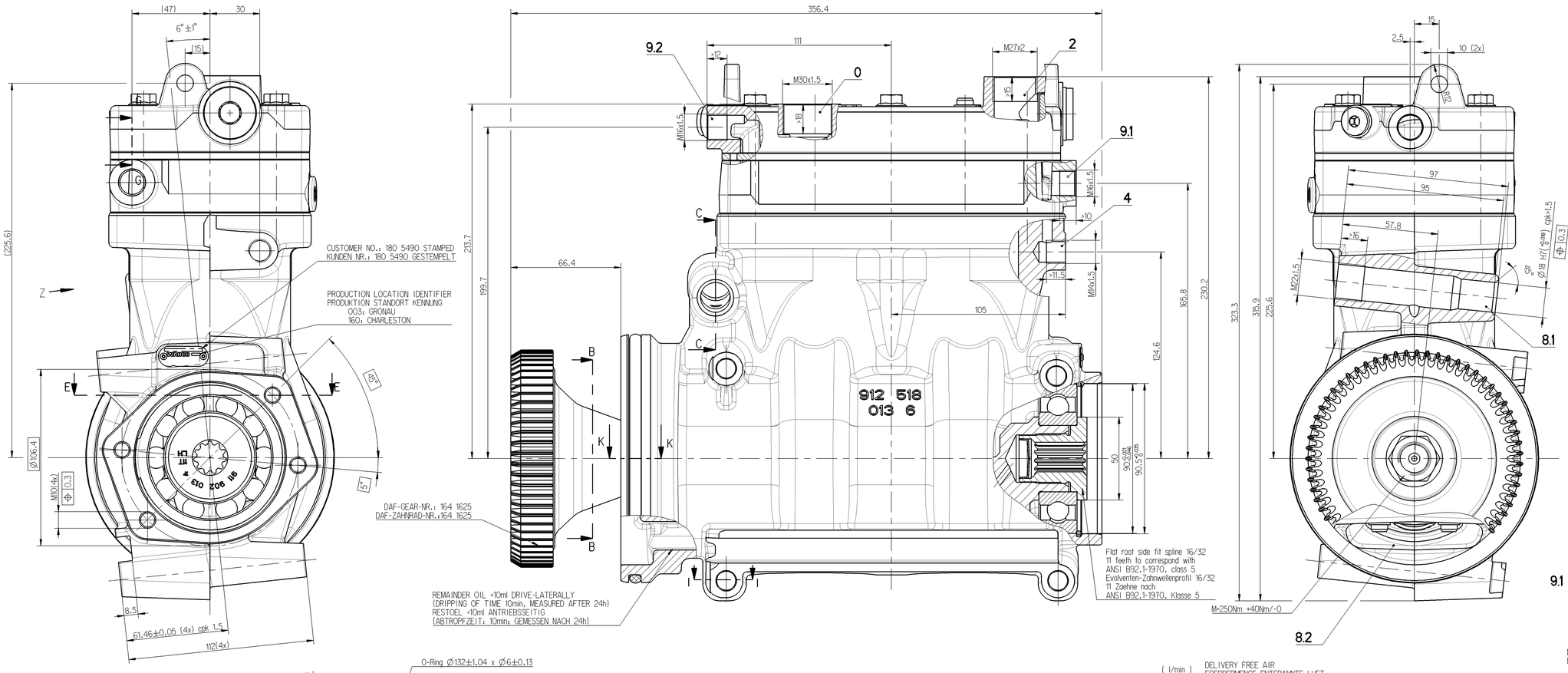

WORKING MEDIUM : BETRIEBSMEDIUM :	AIR LUFT
COOLANT : KÜHLMEDIUM :	WATER WITH ANTIFREEZE WASSER MIT FROSTSCHUTZ
BORE : BOHRUNG :	Ø 85 mm
STROKE : HUB :	42 mm
SWEPT VOLUME : HUBRAUM :	476 cm^3
MAX. WORKING SPEED : MAX. BETRIEBSDREHZAHL :	nmax = 3000 min-1
OVERSPEED (MAX. 4 SEC.) : UEBERDREHZAHL (MAX. 4 SEC.) :	nue = 1.3 x nmax
OPENING PRESSURE SAFETY VALVE : OEFFNUNGSDRUCK SICHERHEITSVENTIL :	21 bar ± 3 bar
LUBRICATION SUPPLIED FROM ENGINE UMLAUFSCHMIERUNG MIT DRUCKÖLANSCHLUSS	
FREE FROM ASBESTOS ASBESTFREI	

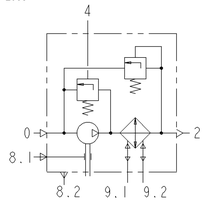

0	SUCTION PORT SAUGANSCHLUSS	M <= 120 Nm
2	DISCHARGE PORT DRUCKANSCHLUSS	M <= 100 Nm
4	GOVERNOR PORT STEUERANSCHLUSS	M <= 20 Nm
8.1	OIL SUPPLY DRUCKÖLANSCHLUSS	M <= 35 Nm
8.2	OIL DRAIN ÖLRÜCKLAUF	
9.1 ⇄ 9.2	COOLANT CONNECTION KUEHLMITTELANSCHLUSS	M <= 60 Nm

MAX. PERMISSIBLE TILT DURING CONTINUOUS WORKING
MAX. ZULAESSIGE NEIGUNG IM DAUERBETRIEB

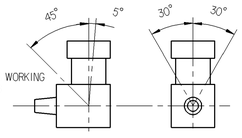

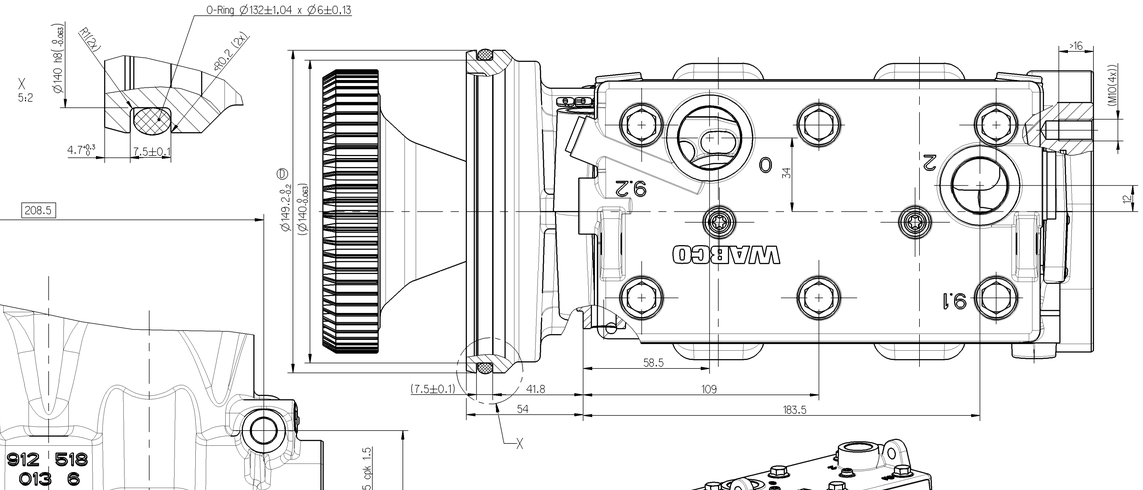

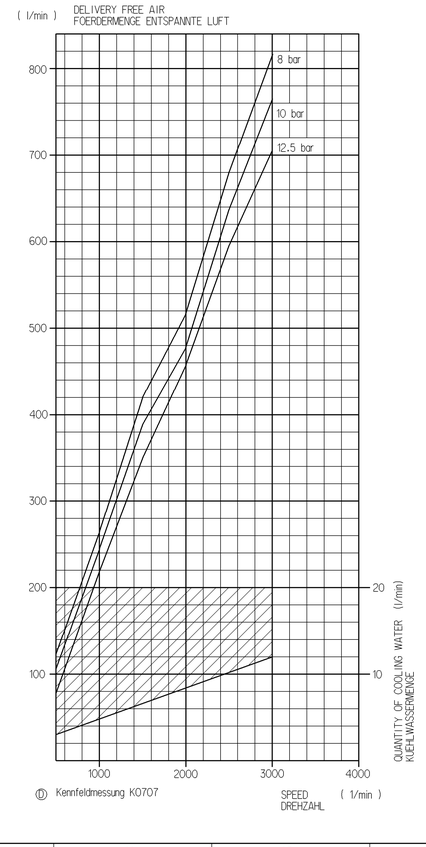

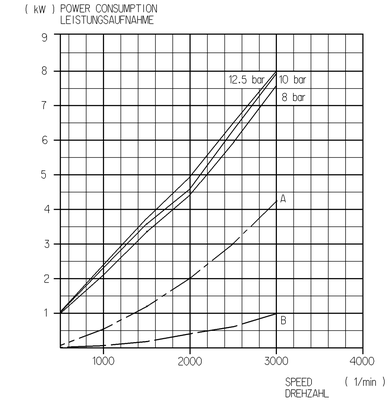

——— OFF LOAD
LEERLAUF

A) COMBINED UNLOADER
(DISCHARGE LINE UNLOADER)
DRUCKREGLER

B) PR-SYSTEM

CLEANLINESS REQUIREMENT

SOFT PARTICLES ARE ALLOWED UP TO 2 mm X 0.1 mm X 0.1 mm

FIBERS ARE ALLOWED UP TO A MAXIMUM DIAMETER OF 0.1 mm AND A MAXIMUM LENGTH OF 10 mm.

CHAMBER	SURFACE AREA	VOLUME	SPECIFICATION
OIL	4543 cm^2	2294 cm^3	JED-593 CLASS II ∴
WATER	732 cm^2	-	JED-593 CLASS I
AIR	1442 cm^2	-	JED-593 CLASS III

∴ ALSO MEASURE AND RECORD PARTICLE CLASS SIZE C ACCORDING TO ISO 16232-10

General Specifications	JED-334-O		
Further Technical Data	912 518 103 O		
Doc. Code	035	Sheet 1/5	To 5/5
General Tolerances JED-261			

Class 11	Range of Nominal Dimensions (in mm)				∢
	≤ 50	> 50 ≤ 180	> 180 ≤ 400	> 400	
Fine X	0.5	1.0	1.5	2.0	±5°
Medium	1.0	2.0	3.0	4.0	
Coarse	2.0	3.5	5.0	6.5	

Tapped Holes acc. JED-152
11 Tolerance Class Applied Crossmarked

Copyright WABCO

Date	Signature	Drawn	
2012-08-01		Hennig	TWO CYLINDER COMPRESSOR ZWEI ZYLINDER KOMPRESSOR
2012-08-02		Checked Joeger	
		Expert D. Joeger	

Mass	Scale	Material No.	Date of first issue	
23.8 KG	1:1	912 518 103 O	2008-09-17	
Size	CAD System		Doc.Code / Language	Sheet
A 0	Pro/E		005 DE	1/1
		ECN No. / Revision / Techn. Resp.	Replacement for	
		158212 / 2 x D / 5010	/	

100mm

WABCO

DM = 912518103O____005 / /

TML = 912518103O____A01