<1>	SAFETY CHARACTERISTICS	0
<2>	SIGNIFICANT CHARACTERISTICS	0
<CI>	CUSTOMER INTERFACE	0

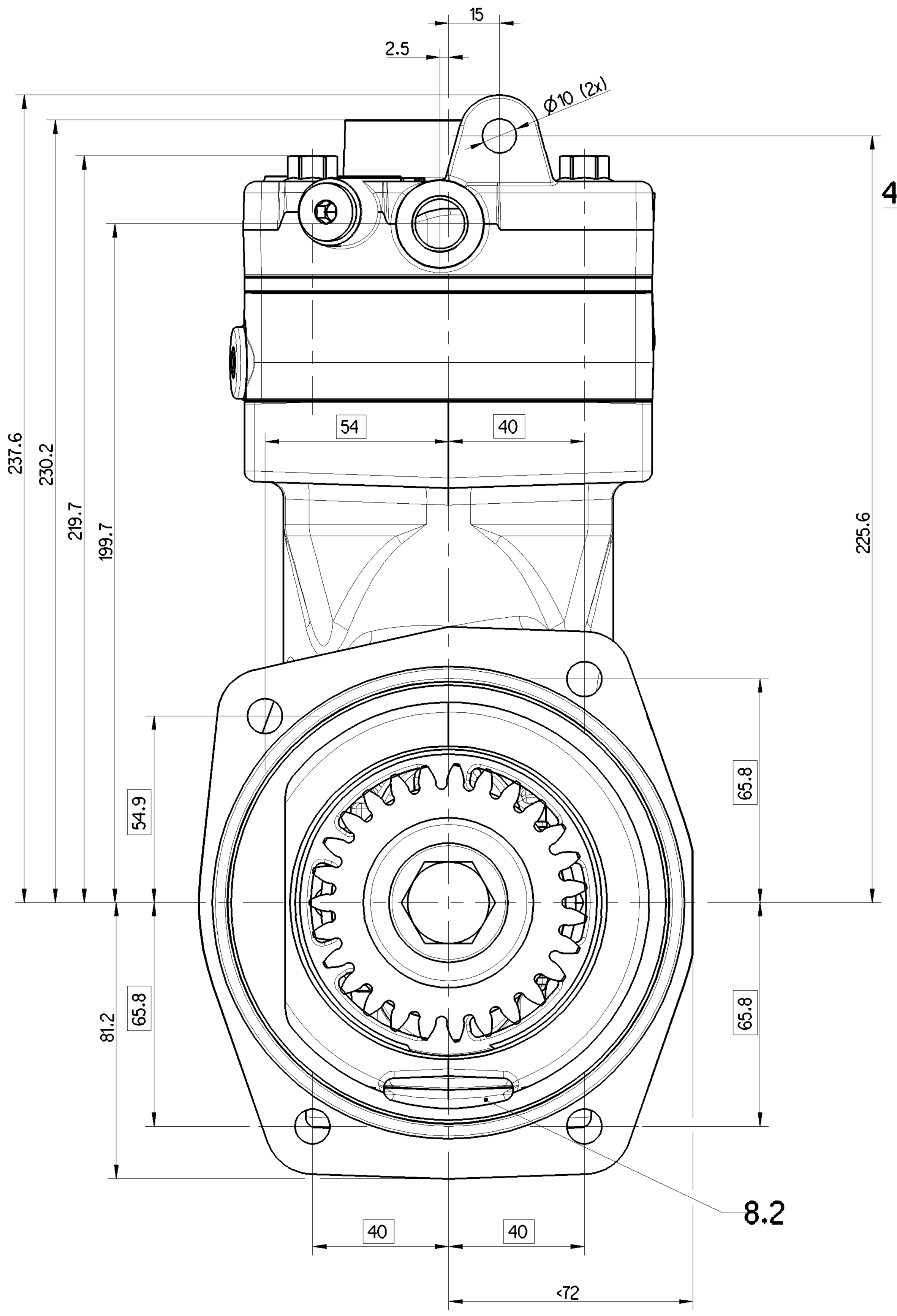

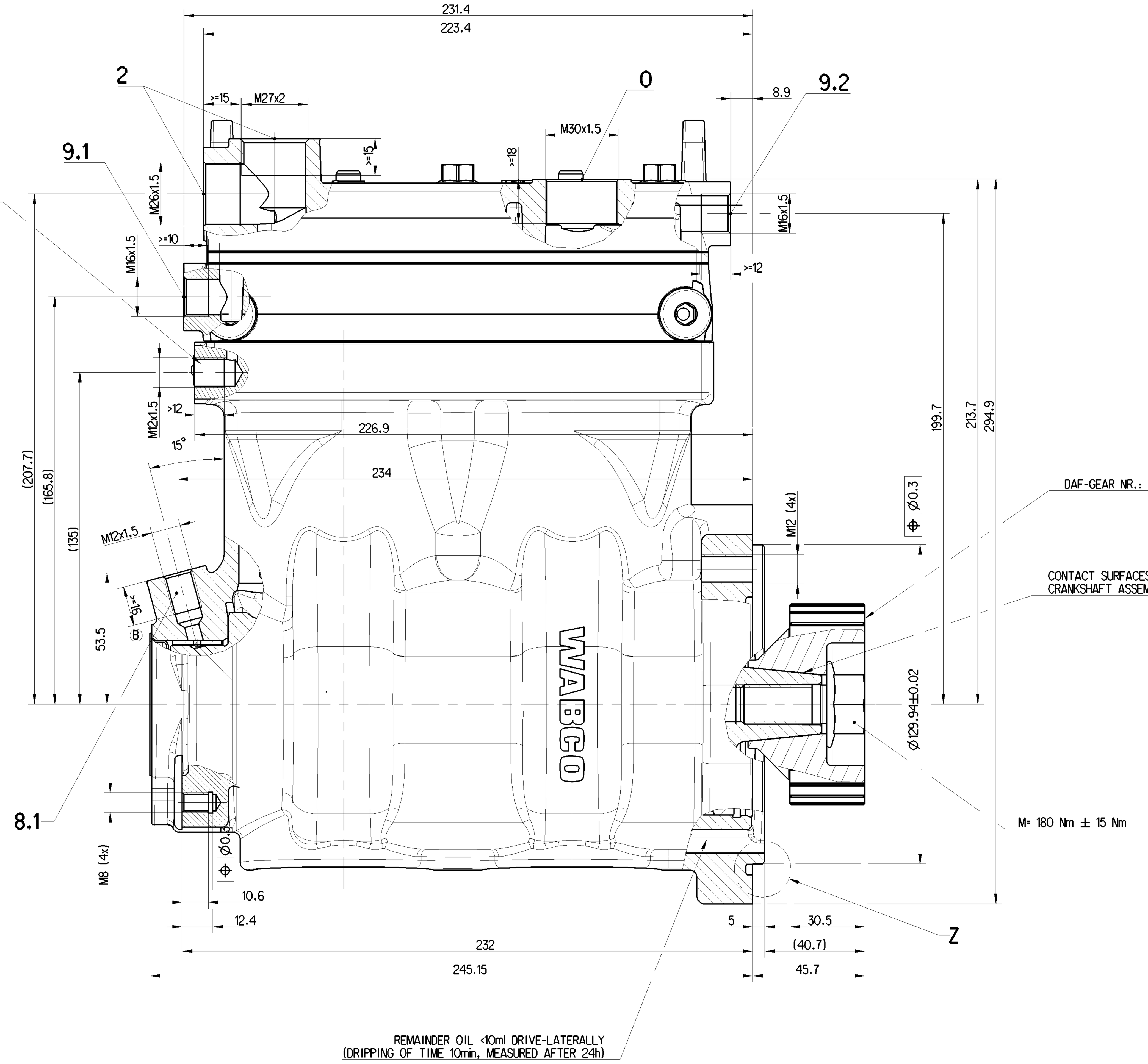

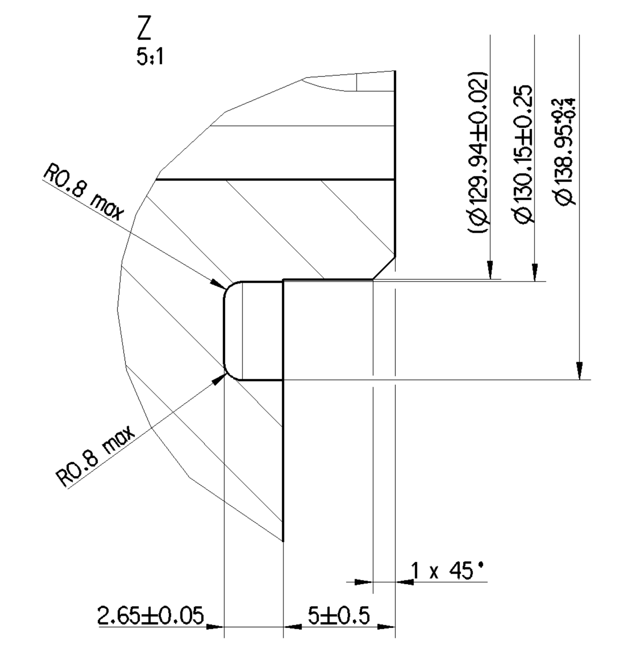

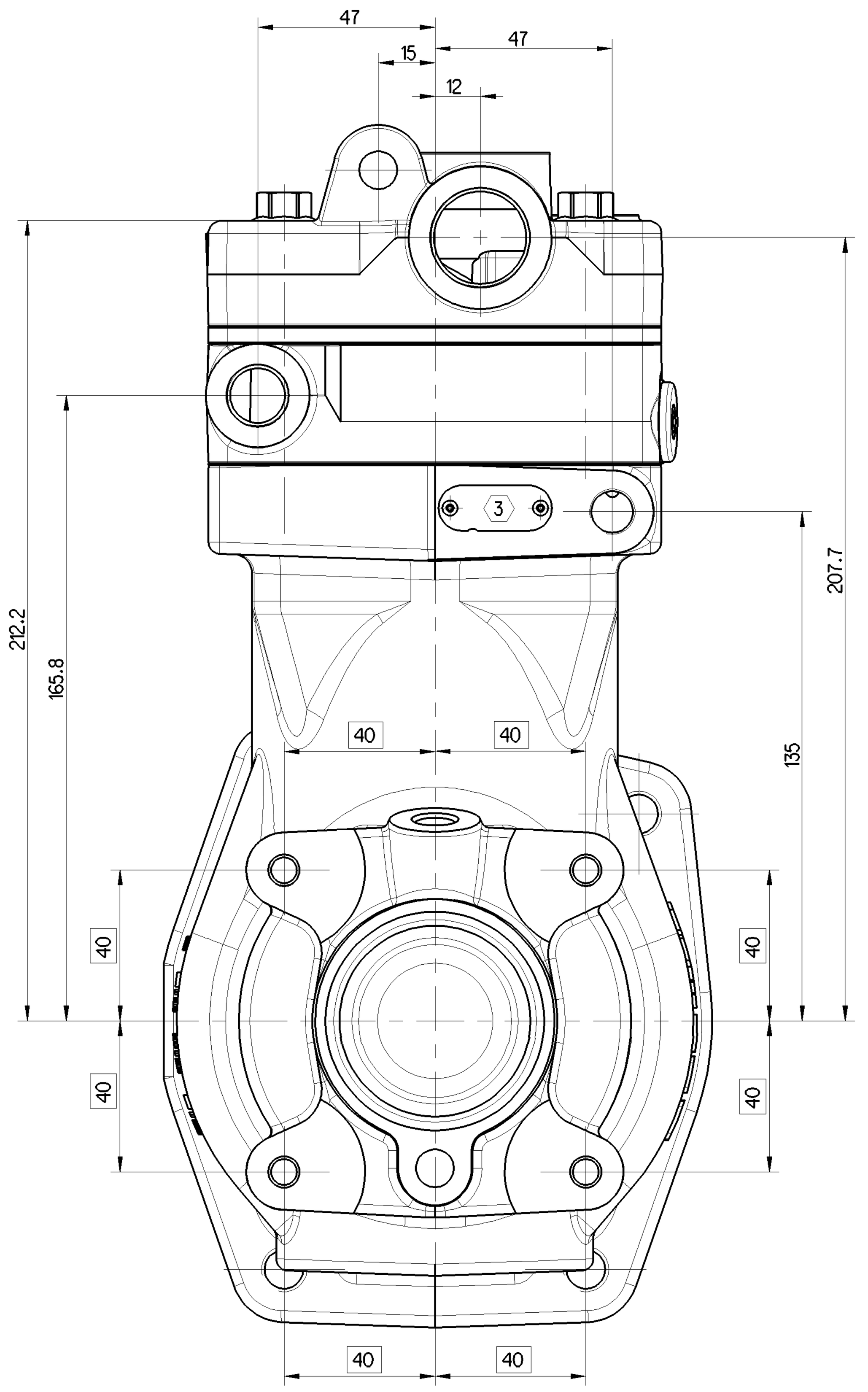

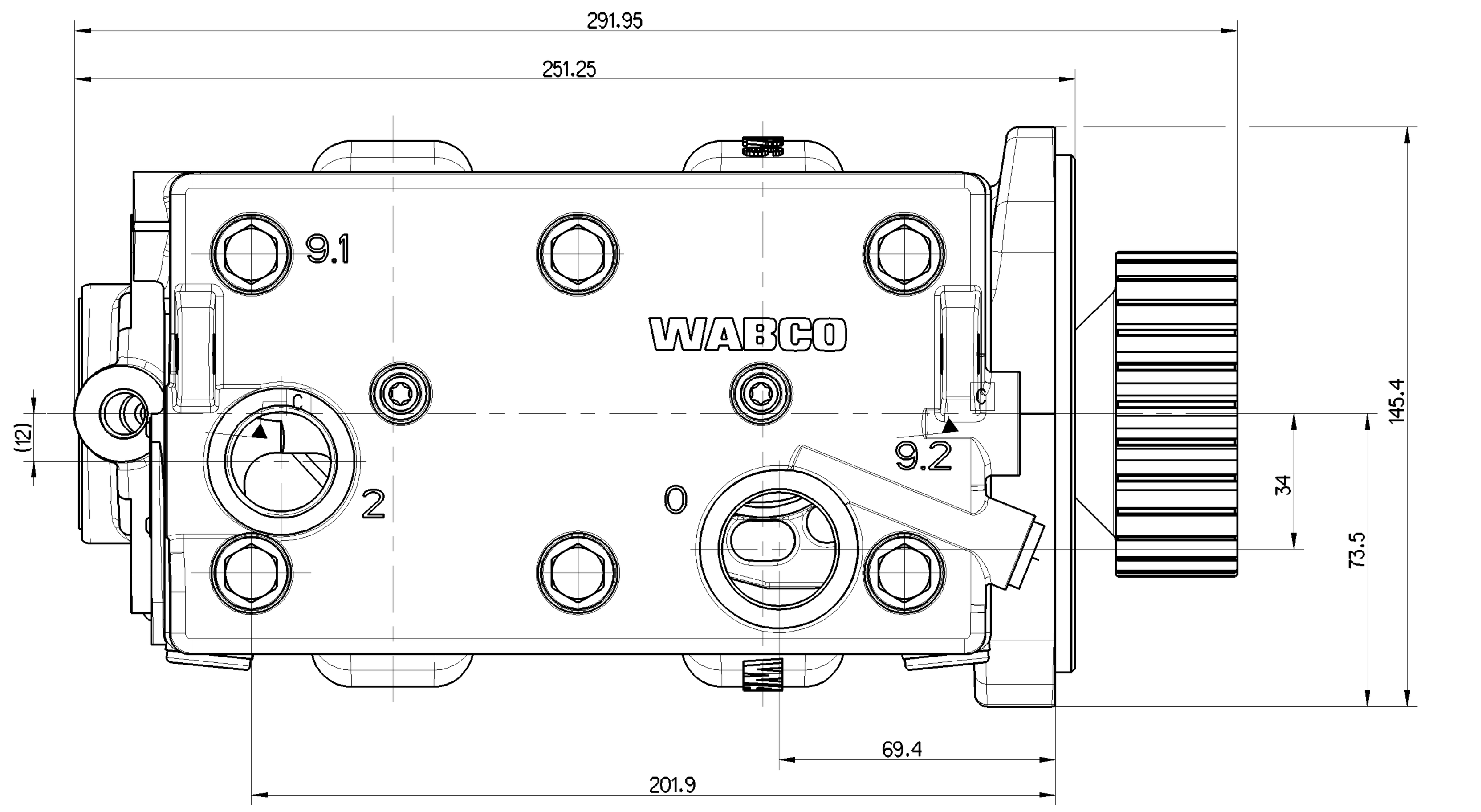

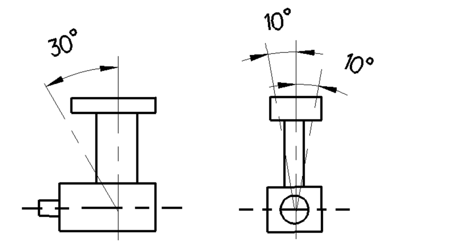

MAX. PERMISABLE TILT DURING CONTINUOUS WORKING

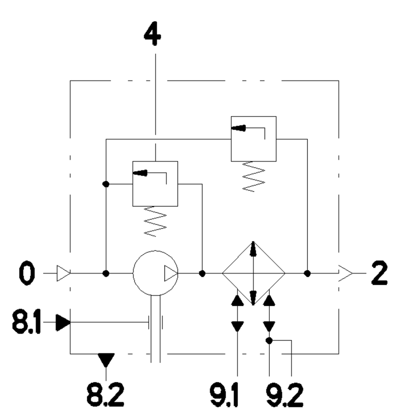

BORE	Ø85 mm
STROCKE	42 mm
SWEPT VOLUME	476 ccm
MAX. WORKING SPEED	n_{max}=3000 min^{-1}
OVERSPEED (MAX. 4 SEC)	n_{ue}=1,3*n_{max} ⟨1⟩
MAX WORKING PRESSURE	p=12.5 bar
OPENING PRESSURE SAFETY VALUE	p=21±3 bar ⟨1⟩
MAX PRESSURE (MAX. 4 SEC)	p=14 bar
LUBRICATION SUPPLIED FROM ENGINE	
FREE FROM ASBESTOS	

0	SUCTION PORT	M <= 120 Nm	⟨2⟩
2	DISCHARGE PORT	M <= 100 Nm	⟨2⟩
4	GOVERNOR PORT	M <= 20 Nm	⟨2⟩
8.1	OIL SUPPLY	M <= 20 Nm	⟨2⟩
8.2	OIL DRAIN		
9.1 9.2	COOLANT CONNECTION	M <= 35 Nm	⟨2⟩

⟨1⟩ MEASURE AT DISCHARGE PORT

⟨2⟩ ACCORDING TO JED-336

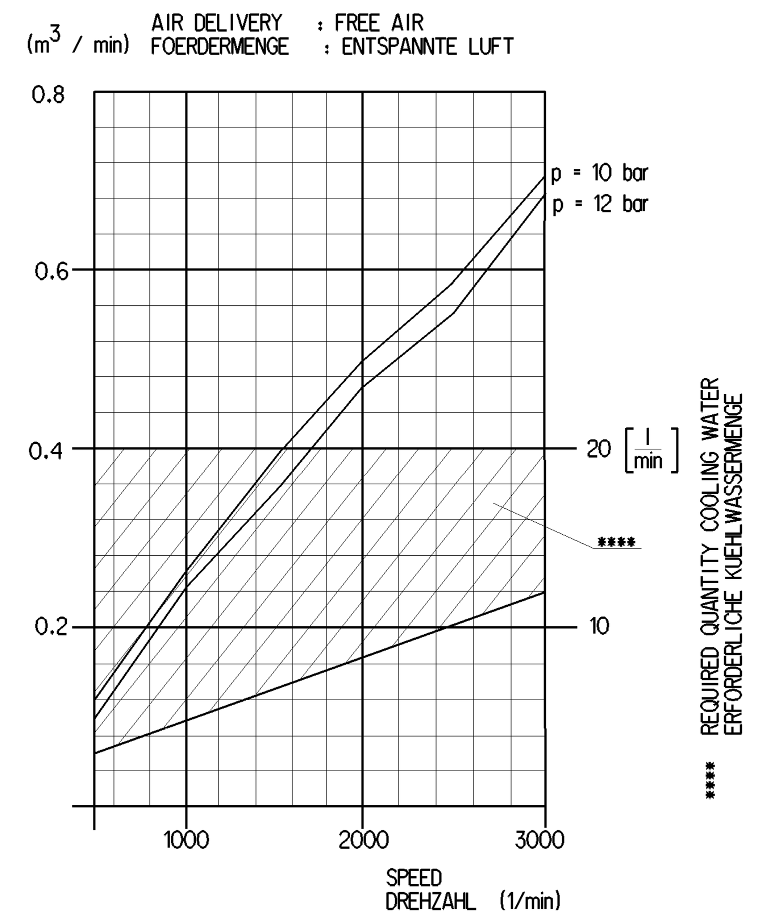

(REFERENZDATEN AUS KENNFELD: 2504)

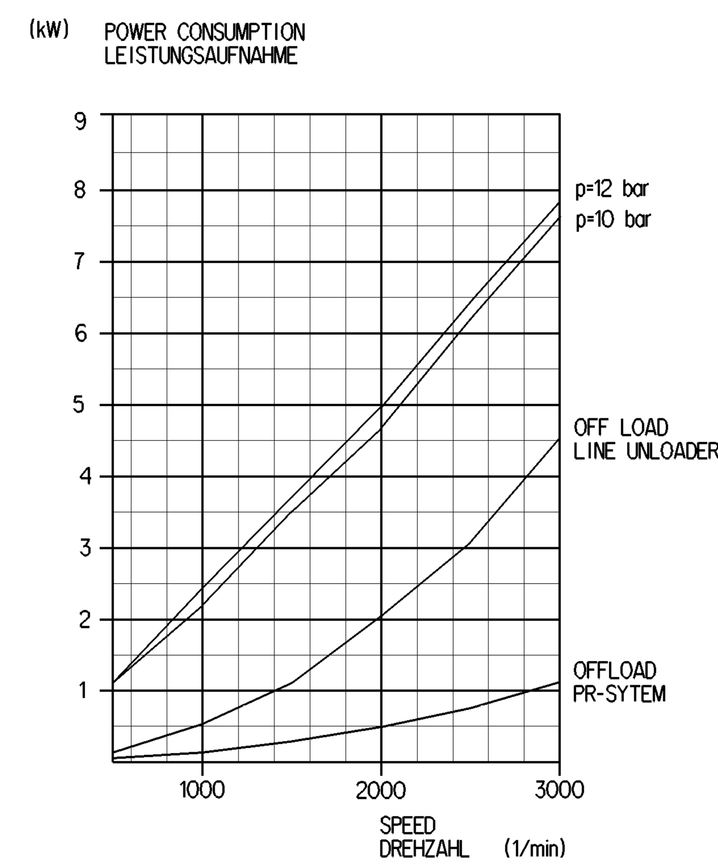

LABELING INFORMATION TABLE (SEE ALSO DOC.922)

PRODUCTION SITE	LABEL	LABEL ID NUMBER	LABEL LAYOUT
PRI 048	⟨3⟩	899 050 145 4	PRODUCTION DATE WABCO ID NUMBER

General Specification: JED-334-0						
Further Technical Data: 912 518 206 R						
Doc. Code: 035			Sheet: 1	To 8		
General Tolerances JED-261						
Class 1)	Range of Nominal Dimensions (± mm) ≤ 50	> 50 ≤ 180	> 180 ≤ 400	> 400	∢	
Fine		0.5	1.0	1.5	2.0	
Medium	X	1.0	2.0	3.0	4.0	±3°
Coarse		2.0	3.5	5.0	6.5	
Tapped Holes acc. JED-152						
1) Tolerance Class Applied Crossmarked						

Copyright WABCO®

Date	Signature
Drawn	
2020-10-05	Matyja
Checked	
2020-10-05	Mucho
Expert	Matyja

WABCO

TWIN CYLINDER COMPRESSOR

Mass	Scale	Material No.	Date of first issue: 2020-06-23		
21.1 KG	1:1	912 518 206 R	Doc.Code 005	Language EN	Sheet 1/1
Size A 0	CAD System CREO	ECN-No. 505909	Revision 1x B	Techn. Resp. 2009	Replacement for -

100mm

Toute Communication ou reproduction de ce document, toute exploitation ou communication de son contenu sont interdites, sauf autorisation expresse. Tout manquement a cette regle constitue un abus evident et expose son auteur au versement de dommages et interets. Tous droits de propriete industrielle reserves, notamment en matiere de brevets et de modeles.
Weitergabe sowie Vervielfaeltigung dieser Unterlage, Verwertung und Mitteilung ihres Inhalts nicht gestattet, soweit nicht ausdruecklich zugestanden. Zuwiderhandlungen stellen einen offensichtlichen Missbrauch dar und verpflichten zu Schadenersatz. Alle Rechte fuer den Fall der Patenterteilung oder Gebrauchsmuster-Eintragung vorbehalten.
Non e permesso consegnare a terzi o riprodurre questo documento, ne utilizzarne il contenuto o renderlo comunque noto a terzi senza autorizzazione esplicita. Ogni infrazione costituira un evidente abuso e comportera il risarcimento dei danni subiti. E'fatto riserva di tutti i diritti derivanti da brevetti o modelli.
Copying of this document and giving it to others and the use or communication of the contents thereof, are forbidden without express authority. Contravention of this restriction will constitute an evident abuse and result in a liability to the payment of damages. All rights are reserved in the event of the grant of patent or registration of a utility model or design. This document is the subject of copyright.