WORKING MEDIUM :	AIR
COOLANT :	WATER WITH ANTIFREEZE
BORE :	Ø 85 mm
STROKE :	52 mm
SWEPT VOLUME :	590 cm^3
MAX. WORKING SPEED :	nmax = 3000 min-1
OVERSPEED (MAX. 4 SEC.) :	nue = 1.3 x nmax
END PLAY OF CRANKSHAFT :	0.1 ... 0.4 mm

LUBRICATION SUPPLIED FROM ENGINE

MAX. WORKING PRESSURE: p= 12.5 bar (1)

MAX. PRESSURE (TEMPORARILY MAX. 4 SEC.): p= 16 bar (1)

(1) MEASURING POINT: DISCHARGE PORT

MAX. PERMISSIBLE TILT DURING CONTINUOUS WORKING

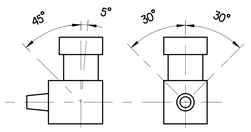

0	SUCTION PORT	
2	DISCHARGE PORT	M <= 150 Nm
4	GOVERNOR PORT	M <= 25 Nm
8.1	OIL SUPPLY	M <= 25 Nm
8.2	OIL DRAIN	
9.1/9.2	COOLANT CONNECTION	M <= 35 Nm

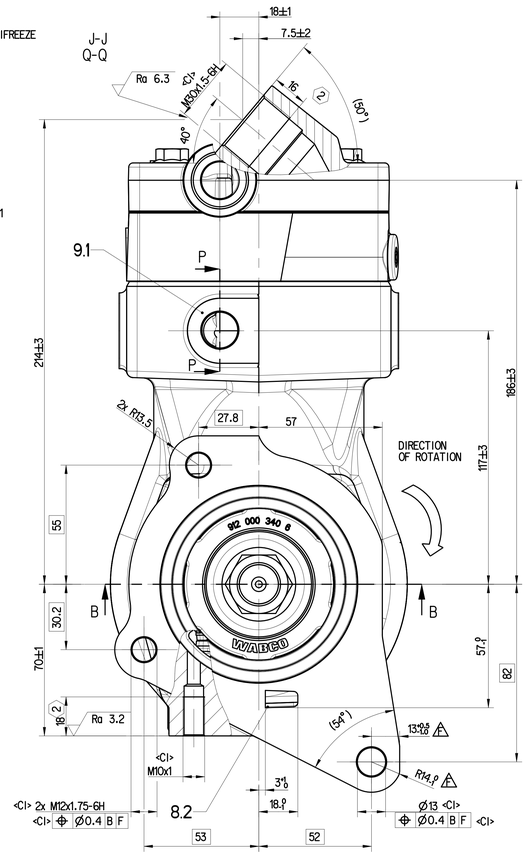

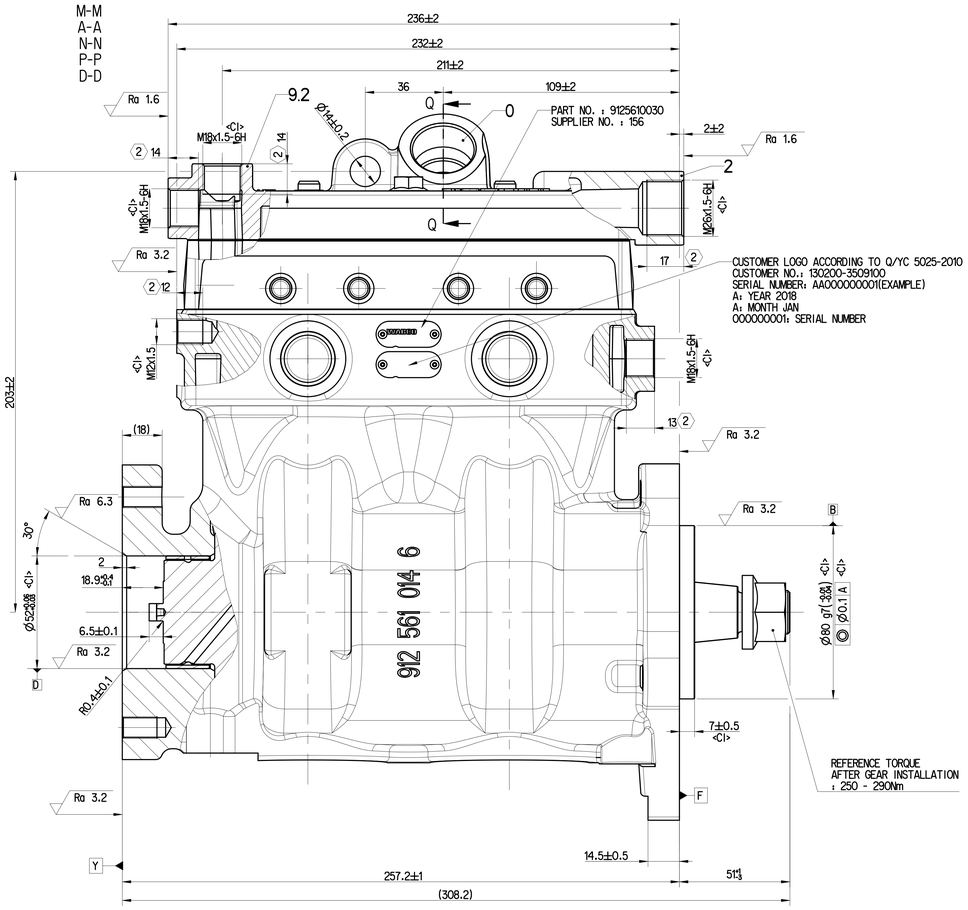

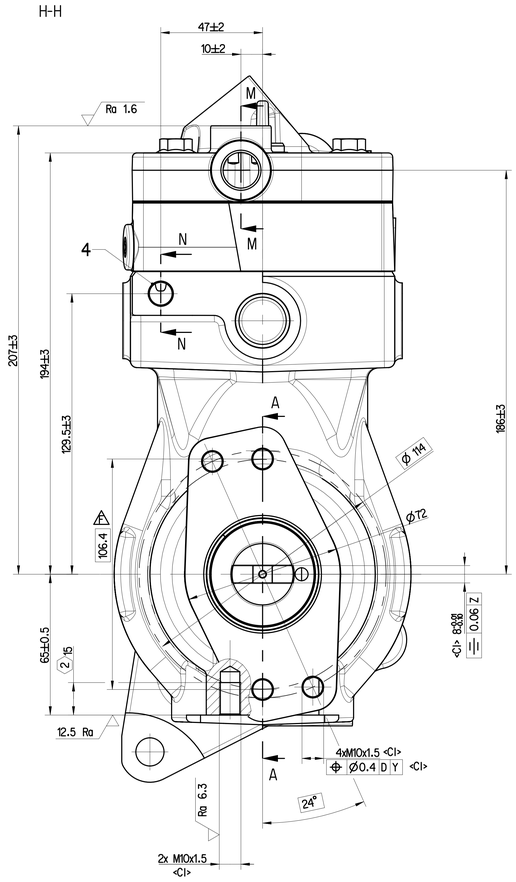

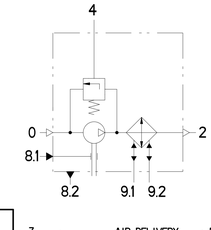

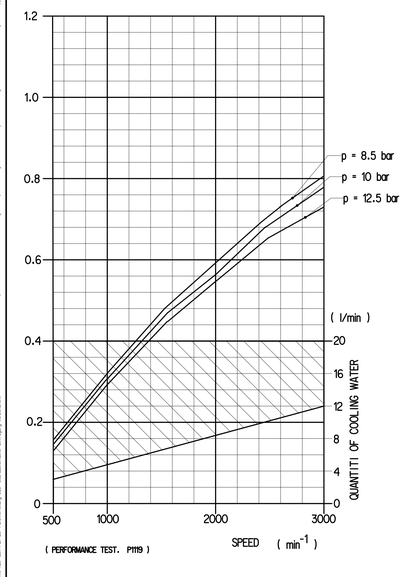

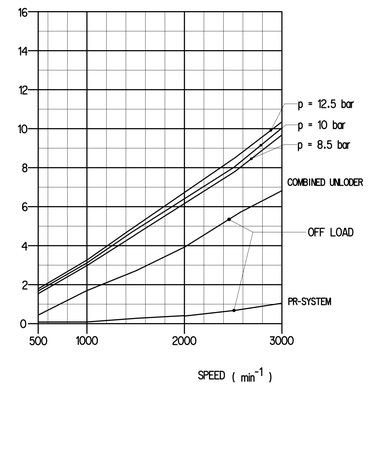

(2) MAX.THREAD ENGAGEMENT

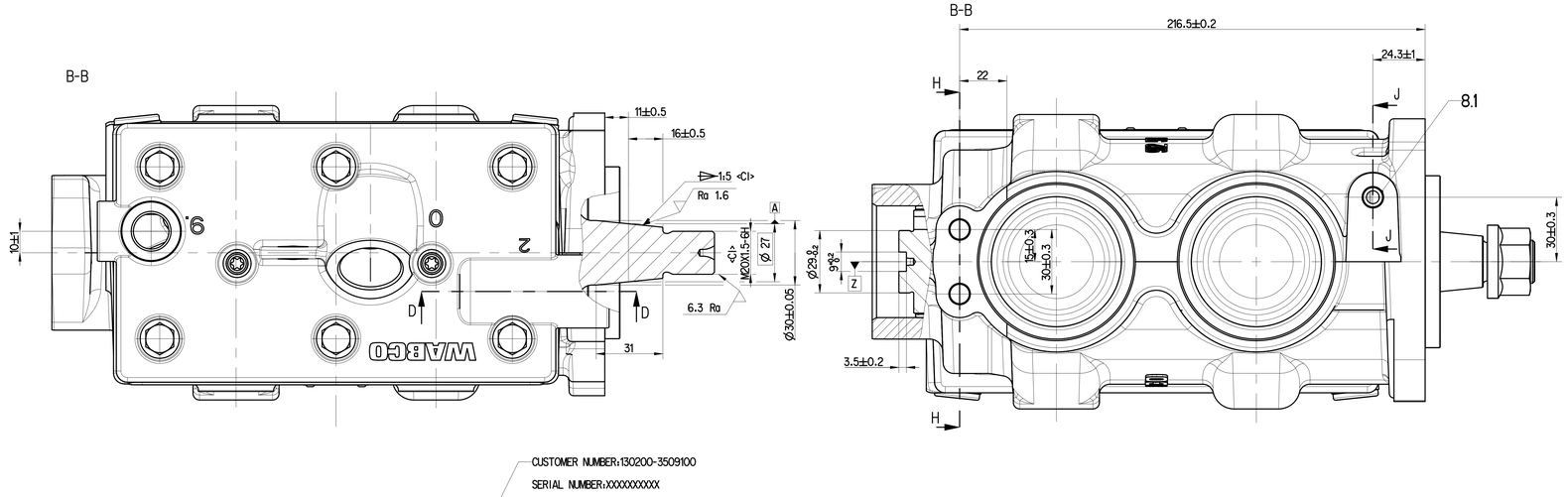

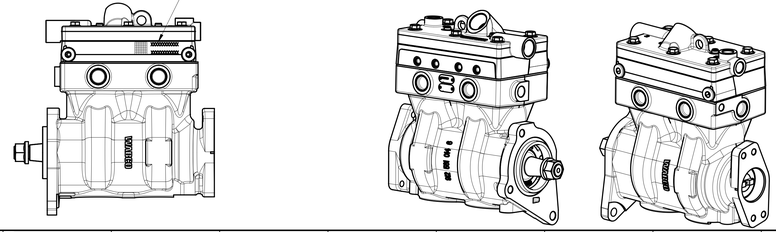

General Specification: ISO 8015, JED-334-1, Size ISO 14405 LP					Copyright ZF®	
Further Technical Data: 912 561 003 0					Date / Signature	
Doc. Code: 035	Sheet: 1 To 8				Drawn: 2024-06-07 Bu	TWIN CYLINDER COMPRESSOR
General Tolerances JED-261					Checked: 2024-06-17 Karthikeyan	
Range of nominal dimensions in mm					Dimensions in mm	
Class 11	≤ 50	> 50 ≤ 180	> 180 ≤ 400	> 400	Mass: 18.670 kg	Scale: 1:1
Fine	±0.5	±1	±1.5	±2	Material No.: 912 561 003 0	Date of first issue: 2018-05-17
Medium X	±1	±2	±3	±4	Doc.Code: 005	Language: EN
Coarse	±2	±3.5	±5	±6.5	Sheet: 1/1	
Tapped Holes acc.: JED-152					Size: A 0	CAD System: CREO
11 Tolerance Class Applied Crossmarked					Eng.No.: 517301	Revision: 4 x F
					Techn. Resp.: 5010	Replacement for: -

SAFETY CHARACTERISTICS	0
SIGNIFICANT CHARACTERISTICS	0
<CI> CUSTOMER INTERFACE	21

Note: Copyright: la riproduzione, la distribuzione e la diffusione di questo documento, nonché l'utilizzo e il contenuto a esso conferiti, sono proibiti, salvo autorizzazione scritta. Ogni violazione comporta il diritto di richiedere il risarcimento dei danni. Copyright: This document and the contents thereof are not to be copied, used or disclosed without written consent. Any violation entitles us to claim damages.