WORKING MEDIUM :	AIR
COOLANT :	WATER WITH ANTIFREEZE
BORE :	Ø 85 mm
STROKE :	52 mm
SWEPT VOLUME :	590 cm^3
MAX. WORKING SPEED :	nmax = 3000 min-1
OVERSPEED (MAX. 4 SEC.) :	nue = 1.3 x nmax
END PLAY OF CRANKSHAFT :	0.1 ... 0.4 mm

LUBRICATION SUPPLIED FROM ENGINE

MAX. WORKING PRESSURE:	p= 12.5 bar (1)
MAX. PRESSURE (TEMPORARILY MAX. 4 SEC.):	p= 16 bar (1)

(1) MEASURING POINT: DISCHARGE PORT

MAX. PERMISSIBLE TILT DURING CONTINUOUS WORKING

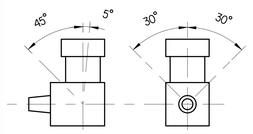

0	SUCTION PORT	
2	DISCHARGE PORT	M <= 150 Nm
4	GOVERNOR PORT	M <= 25 Nm
8.1	OIL SUPPLY	M <= 25 Nm
8.2	OIL DRAIN	
9.1/9.2	COOLANT CONNECTION	M <= 35 Nm

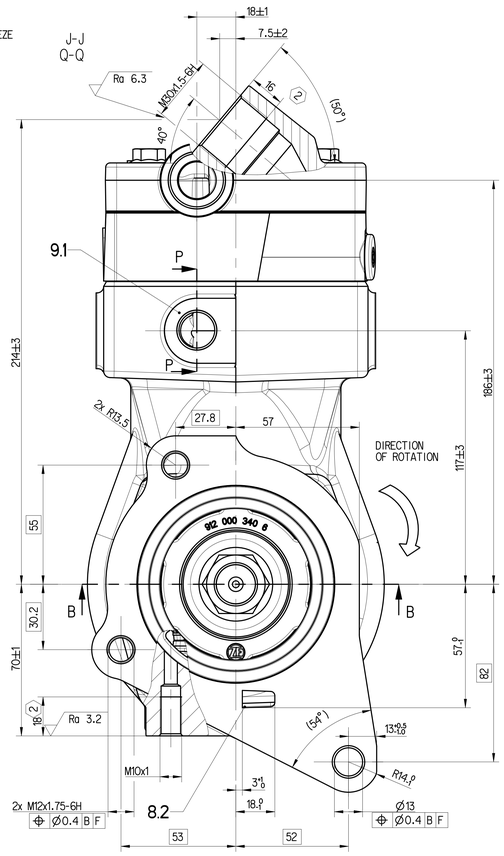

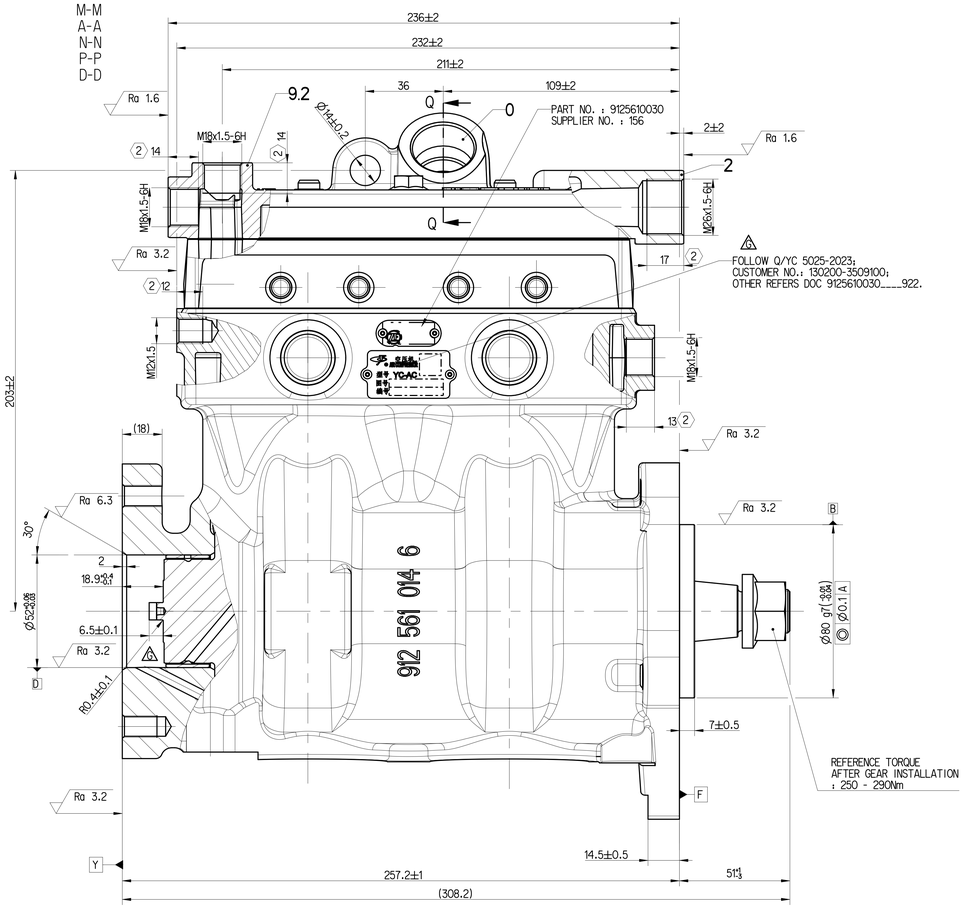

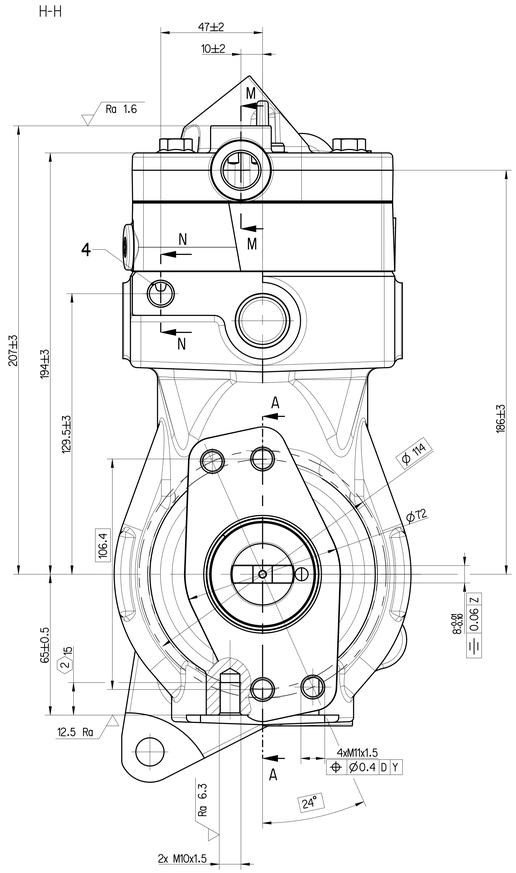

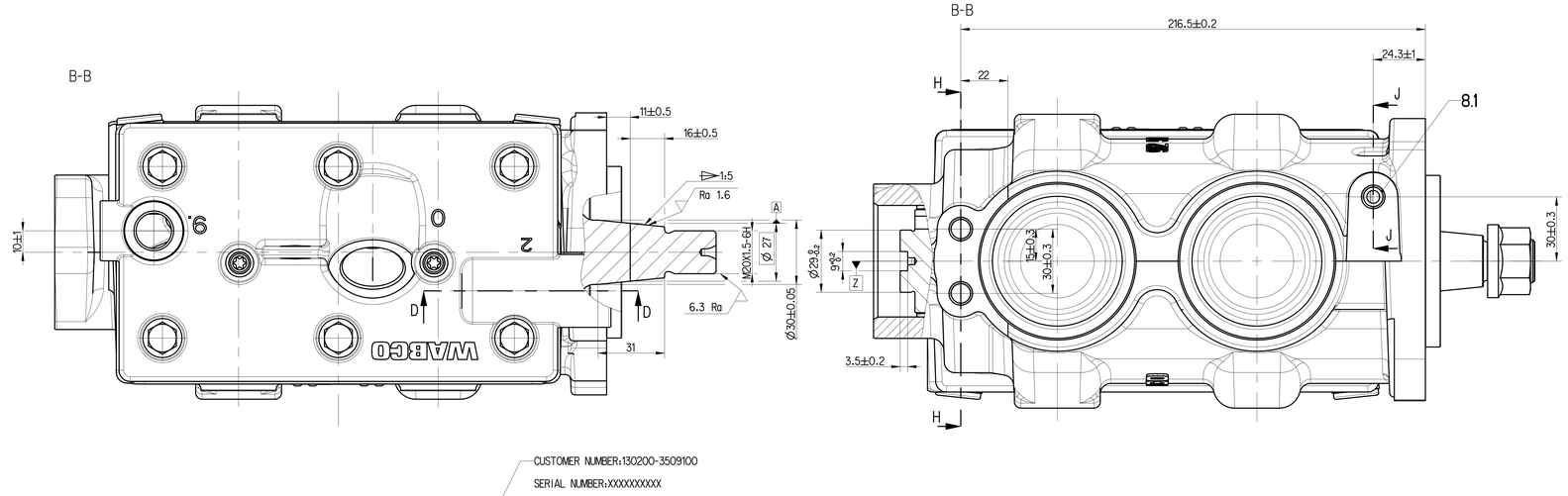

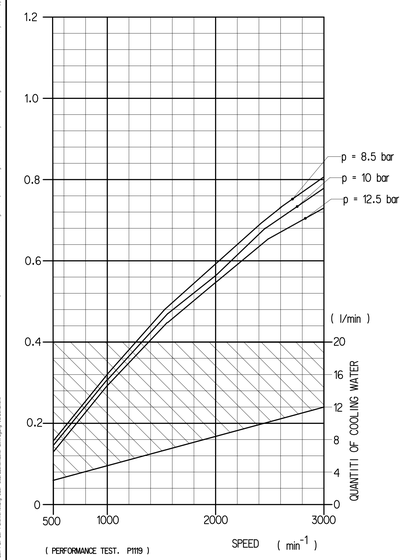

(PERFORMANCE TEST. P1119)

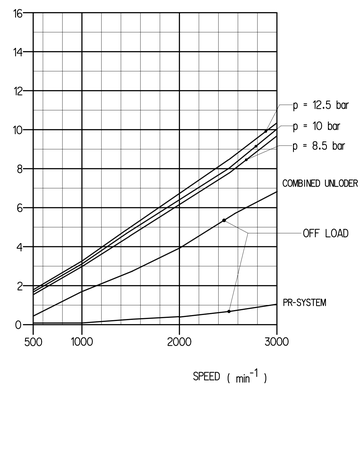

(2) MAX.THREAD ENGAGEMENT

CUSTOMER NUMBER:130200-3509100

SERIAL NUMBER:XXXXXXXXXX

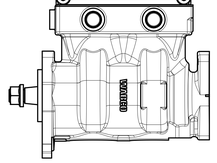

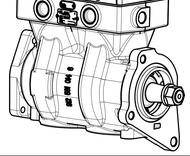

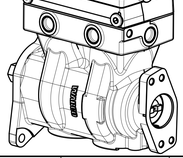

General Specification: ISO 8015, JED-334-1, Size ISO 14405 LP						Copyright ZF®	
Further Technical Data: 912 561 003 0						Date / Signature	
Doc. Code: 035		Sheet: 1 To 8				Drawn: 2026-06-12 Xia	TWIN CYLINDER COMPRESSOR
General Tolerances JED-261						Checked: 2026-06-12 Karthikeyan	
Range of nominal dimensions in mm						Dimensions in mm	
Class	11	≤ 50	> 50 ≤ 180	> 180 ≤ 400	> 400		
Fine		±0.5	±1	±1.5	±2	±.3°	
Medium	X	±1	±2	±3	±4		
Coarse		±2	±3.5	±5	±6.5		
Tapped Holes acc.: JED-152							
11 Tolerance Class Applied Crossmarked							

Mass	Scale	Material No.	Date of first issue: 2016-05-17
18.664 kg	1:1	912 561 003 0	Doc.Code: 005 Language: EN Sheet: 1/1
Size: A 0	CAD System: CREO	ECN-No.: 522780 Revision: 2 x G Techn. Resp.: 5010	Replacement for: -

100mm

Note: Copyright by reproduction or by distribution, even in extracts, not permissible to the extent that it is not expressly permitted by law. Violations will be prosecuted. Copyright: Copyright, Copyright, Copyright,