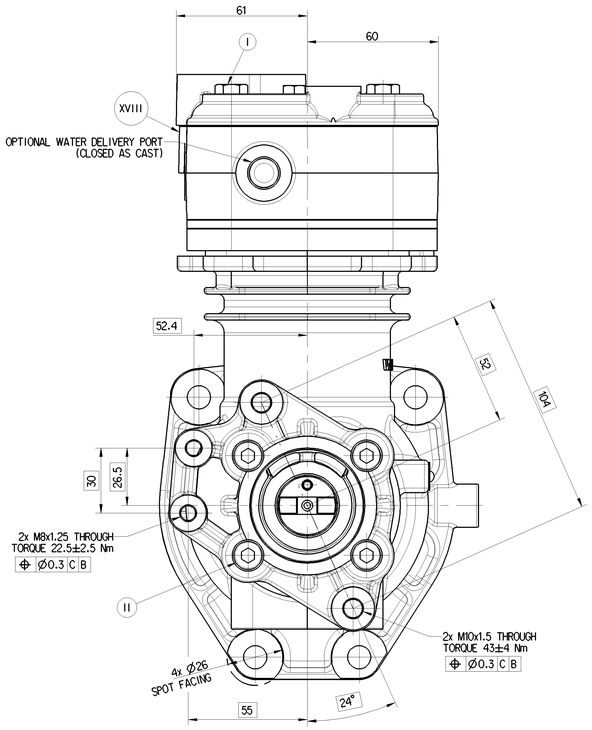

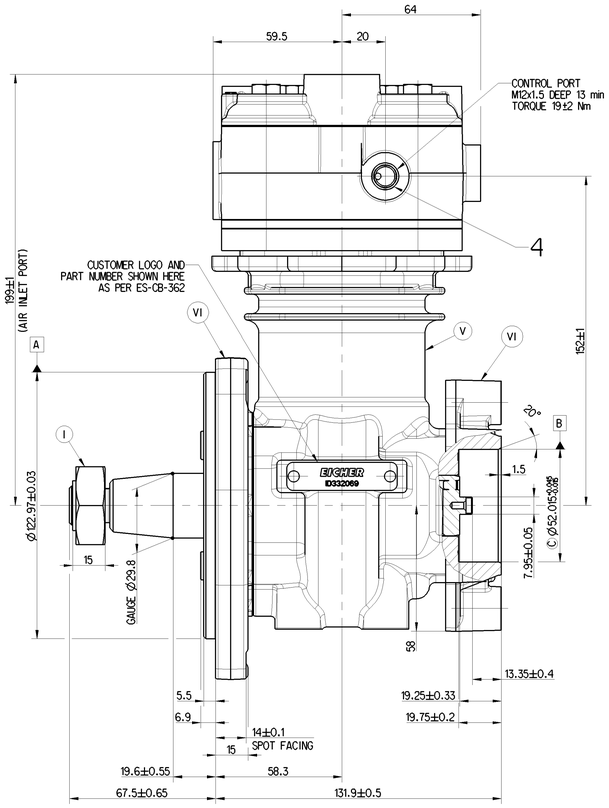

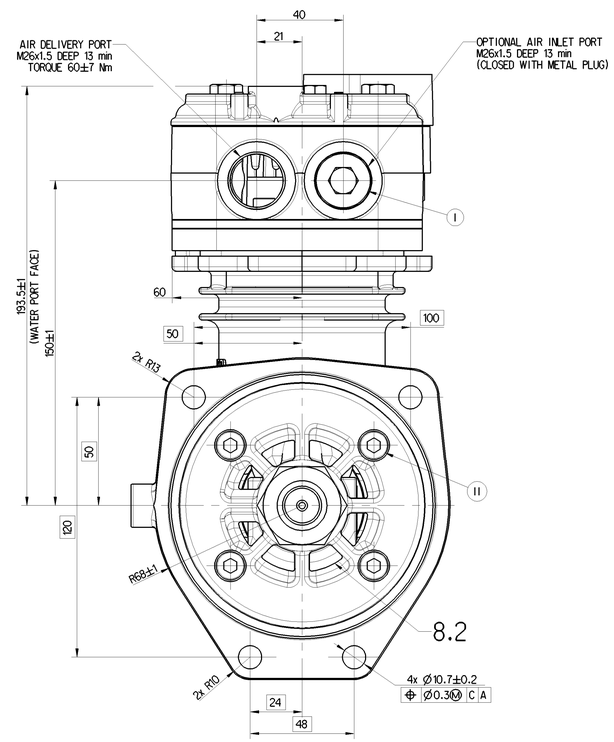

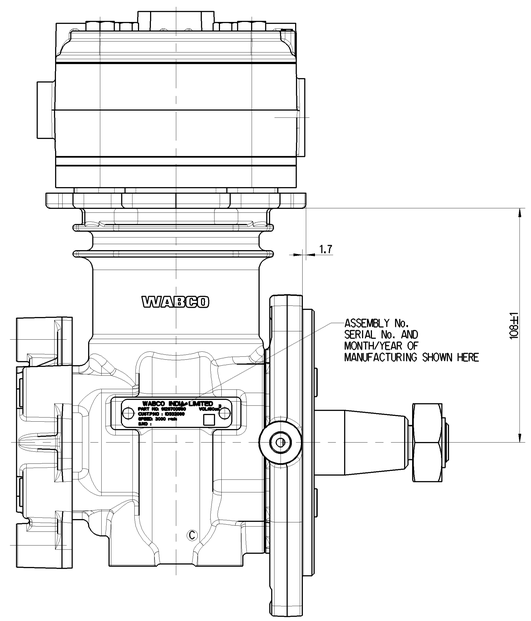

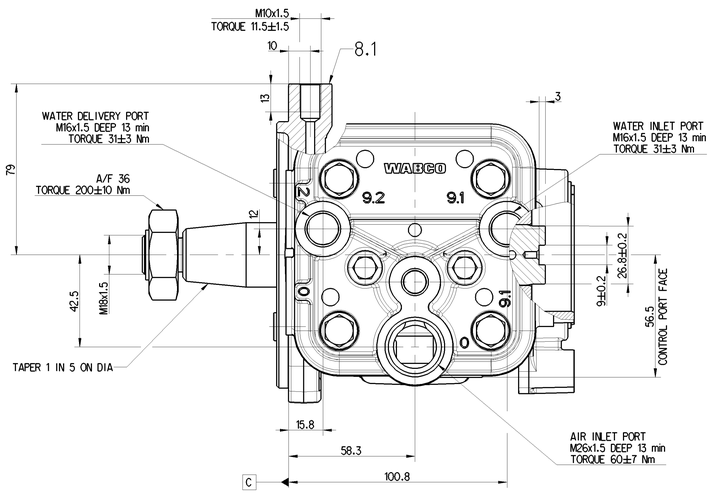

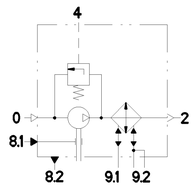

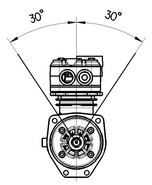

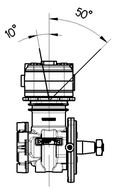

OPEN PORTS ARE FITTED WITH CLOSURE PLUGS FOR STORAGE AND TRANSIT PURPOSES.
EXPOSED MACHINED CAST IRON/STEEL SURFACES ARE PROTECTED
WITH RUST PREVENTION OIL

BORE DIAMETER	66.7 mm
STROKE	46 mm
DISPLACEMENT	160 cm^3
MAXIMUM SPEED	3000 r/min
MAXIMUM SPEED (SHORT DURATION)	3900 r/min
AXIAL PLAY	0.25±0.20 mm
PAINT COLOUR	BLACK
STEERING PUMP TORQUE	40Nm (CRANKSHAFT TANG REGION HARDENED)

0 = AIR INLET PORT
2 = AIR DELIVERY PORT
9.1 = WATER INLET PORT
9.2 = WATER DELIVERY PORT
8.1 = OIL INLET
8.2 = OIL DELIVERY
4 = SIGNAL PORT

PART CODE	MATERIAL	SURFACE PROTECTION
XVIII	ALUMINIUM ALLOY	NO TREATMENT
XVII	STEEL	NO TREATMENT
XVI	CAST IRON	PLATED
XV	STEEL	ZINC IRON PLATED
XIV	CAST IRON	NO TREATMENT
XIII	ZINC ALLOY	ANODISED
XII	PLASTIC	NO TREATMENT
XI	RUBBER	NO TREATMENT
X	STAINLESS STEEL	NO TREATMENT
IX	BRASS	NO TREATMENT
VIII	ZINC ALLOY	CHROMATED
VII	ALUMINIUM ALLOY	ANODISED
VI	ALUMINIUM ALLOY	CHROMATED
V	CAST IRON	PAINTED
IV	STEEL	POWDER COATED
III	STEEL	PAINTED
II	STEEL	PHOSPHATED
I	STEEL	ZINC PLATED

This Corporation is exclusive in its ownership, has exclusive in ownership of its name and trade, not patented, secret, or equipment, and the rights of use and exclusive use of the same are reserved to WABCO. Its use is permitted only in the terms and conditions of the contract