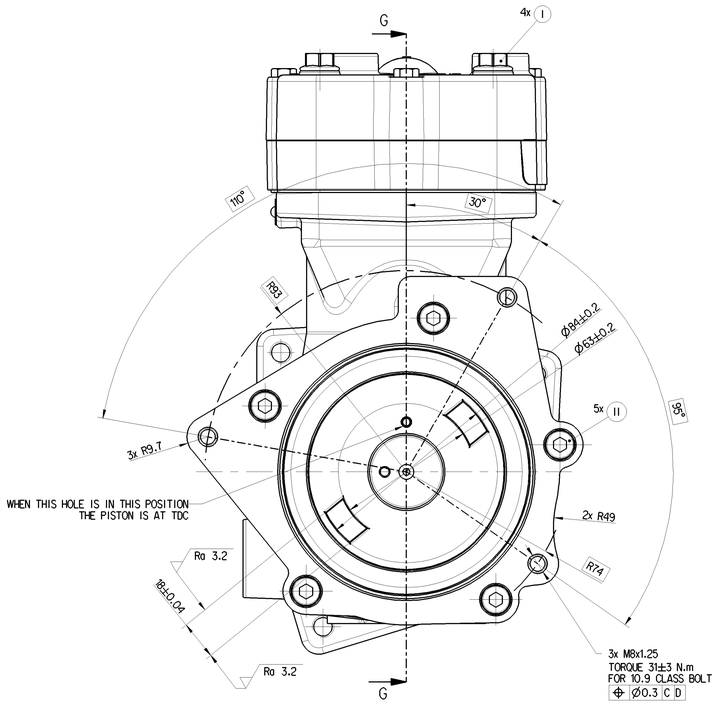

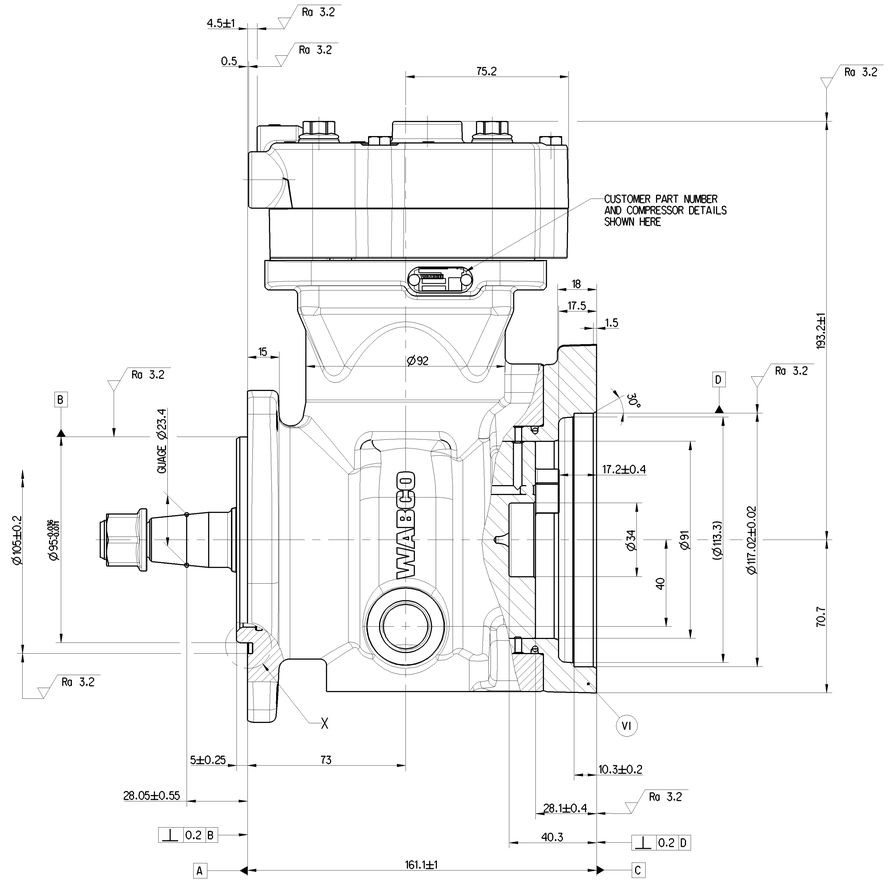

G-G

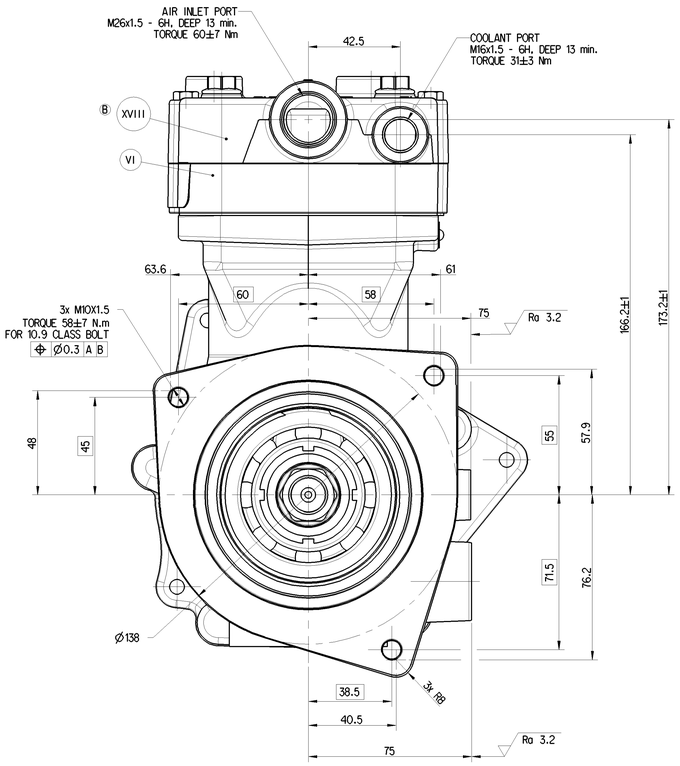

**** DIAGRAM FOR NATURALLY ASPIRATED COMPRESSOR ONLY

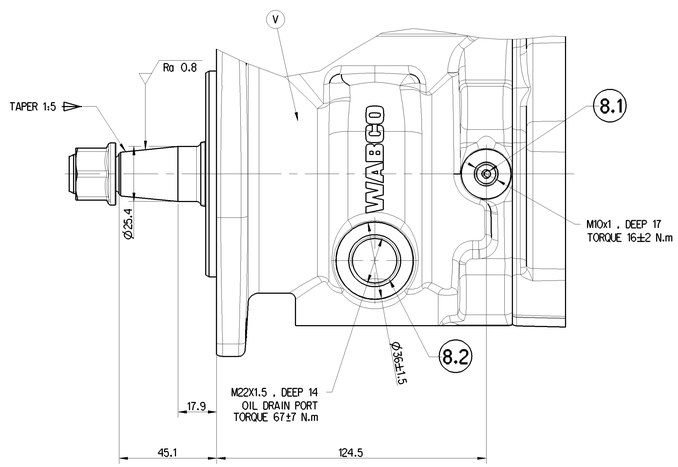

X
5:1

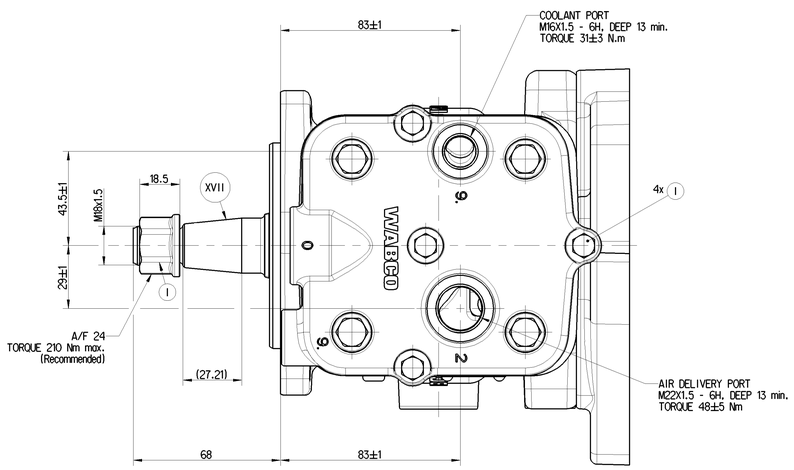

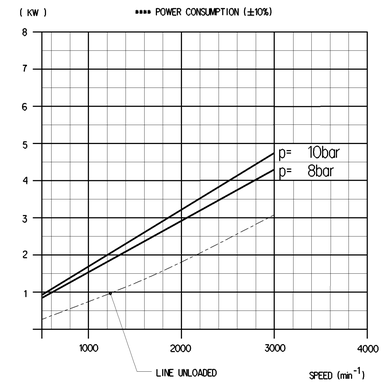

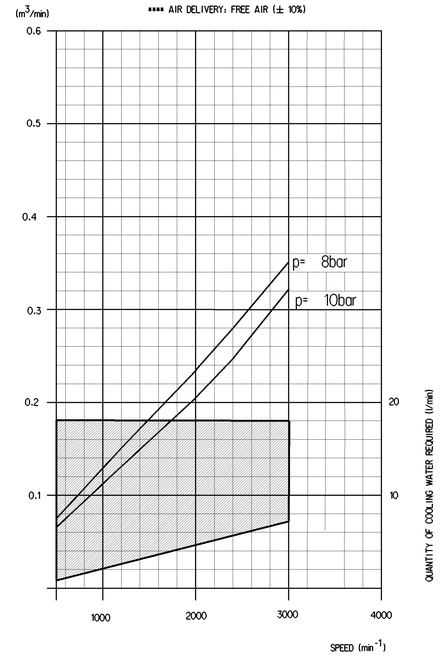

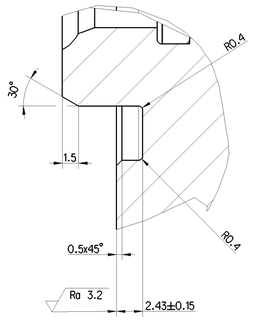

XVIII	ALUMINIUM ALLOY	NO TREATMENT	B
XVII	STEEL	NITRIDED	
XVI	CAST IRON	PLATED	
XV	STEEL	ZINC IRON PLATED	
XIV	CAST IRON	NO TREATMENT	
XIII	ZINC ALLOY	ANODISED	
XII	PLASTIC	NO TREATMENT	
XI	RUBBER	NO TREATMENT	
X	STAINLESS STEEL	NO TREATMENT	
IX	BRASS	NO TREATMENT	
VIII	ZINC ALLOY	CHROMATED	
VII	ALUMINIUM ALLOY	ANODISED	
VI	ALUMINIUM ALLOY	CHROMATED	
V	CAST IRON	PAINTED	
IV	STEEL	POWDER COATED	
III	STEEL	PAINTED	
II	STEEL	PHOSPHATED	
I	STEEL	ZINC PLATED	
PART CODE	MATERIAL	SURFACE PROTECTION	

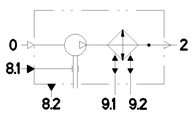

0 = AIR INLET PORT
2 = AIR DELIVERY PORT
9. = COOLANT PORT
8.1 = OIL INLET
8.2 = OIL DELIVERY

FREE FROM ASBESTOS

OPEN PORTS ARE FITTED WITH CLOSURE PLUGS FOR STORAGE AND TRANSIT PURPOSES

EXPOSED MACHINED CAST IRON/STEEL SURFACES ARE PROTECTED WITH RUST PREVENTION OIL

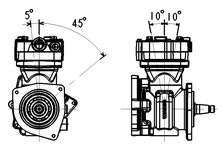

WORKING MEDIUM	AIR
BORE DIAMETER	Ø 80 mm
STROKE	46 mm
DISPLACEMENT	230 cm 3
MAXIMUM WORKING SPEED(n_{max})	3000 r/min
MAXIMUM OVER SPEED (TEMPORARILY LESS THAN 4 sec)	1.3 n_{max}
THROUGH DRIVE TORQUE CAPACITY (TANG DRIVE)	61 N.m
MAXIMUM SYSTEM (or) WORKING PRESSURE	10 bar
MAXIMUM PRESSURE AT DISCHARGE PORT	12 bar
MAXIMUM PRESSURE AT DISCHARGE PORT (TEMPORARILY LESS THAN 4 sec)	16 bar
CRANKCASE PAINT COLOUR	BLACK
CYLINDER HEAD COOLANT	PRESSURE FEED FROM ENGINE
LUBRICATION	PRESSURE FEED FROM ENGINE

General Specification: JED-3341 , Size 130 14405 LP
Further Technical Data: 912 970 065 0
Doc. Code: 035 — Sheet: 01 To 06
General Tolerances JED-261

Class 1)	Range of Nominal Dimensions (in mm)				
	≥ 50	> 50 ≤ 180	> 180 ≤ 400	> 400	
Fine	0.5	1.0	1.5	2.0	
Medium X	1.0	2.0	3.0	4.0	±3°
Coarse	2.0	3.5	5.0	6.5	

Tapped Holes acc.: JED-152
1) Tolerance Class Applied Crossmarked

Copyright WABCO®
Date | Signature
Drawn: 2020-04-03 SAHAYA
Checked: 2020-04-03 Karthikeyan B
Agent: B.Karthikeyan
Mass: 12.130 kg | Scale: 1:1 (5:1) | Material No.: 912 970 065 0 | Date of first issue: 2016-11-07
Size: A 0 | CAD System: CREO | ECN No.: 500951 | Revision: 2 B | Techn. Resp.: 5000_WIN | Doc.Code: 005 | Language: EN | Sheet: 1/1 | Replacement for: 884 017 976 0

WABCO
SINGLE CYLINDER COMPRESSOR

This document is the property of the author/owner. It is loaned to the recipient for his information only. It may not be reproduced or copied, in whole or in part, nor may its contents be divulged to any third party without written authorisation from the owner. If this document is loaned under a written agreement, its use is subject to the terms and conditions of that agreement. If you are not the intended recipient, you are hereby notified that any disclosure, copying, distribution or use of the information contained in this document is prohibited and may be unlawful. Ce document est la propriété de l'auteur/propriétaire. Il est prêté au destinataire pour son information seulement. Il ne peut pas être reproduit ou copié, en tout ou en partie, ni son contenu divulgué à un tiers sans autorisation écrite du propriétaire. Si ce document est prêté en vertu d'un accord écrit, son usage est soumis aux termes et conditions de cet accord. Si vous n'êtes pas le destinataire prévu, par la présente vous êtes avisé que toute divulgation, copie, distribution ou utilisation des informations contenues dans ce document est interdite et peut être illégale.