TECHNICAL DATA	COMPRESSOR	E-MOTOR	TEMPERATURE SENSOR PT1000(G)	ELECTRICAL FAN (F)	OIL PRESSURE SWITCH (H&J)
TYPE OF CURRENT	------	ALTERNATING CURRENT	DIRECT CURRENT		
RATED VOLTAGE	------	380V	-----	24V	24V
RATED CURRENT	------	7.8A	0.1--0.3mA	1.44A	1.75A max.
MAX. CURRENT	------	18.4A			
DUTY CYCLE IEC 60034-1 S3 U:380V P1:10 bar Pamb:1013mbar	25%	25%	100%	100% PERMISSIBLE (MAY NOT WORK WHEN TEMPERATURE IS LOWER -20°C	100% PERMISSIBLE
DEGREE OF PROTECTION	IP67				
ORMIC RESISTANCE	-----	2.18Ω±2.5%	R=839.14Ω at -40°C R=1081.43Ω at +20°C R=1159.88Ω at +40°C R=1350.49Ω at +90°C	------	MAX. 50Ω FOR NEW
AMBIENT TEMPERATURE WITH FUNCTION	-25°C----+60°C				
NUMBER OF POLES	------	8	------	------	------

VOLTAGE,FREQUENCY vs RPM MOTOR DATA

RPM	VOLTAGE (V)	FREQUENCY (Hz)
1000	253	67
1250	317	83
1500	380	100

VOLTAGE VS FREQUENCY MOTOR DATA

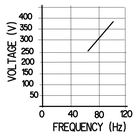

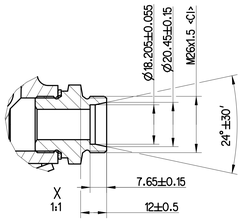

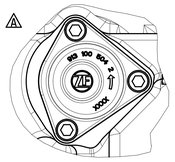

ROTATION DIRECTION:
ANTI CLOCKWISE
VIEW Q

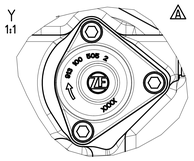

ROTATION DIRECTION:
CLOCKWISE
VIEW P

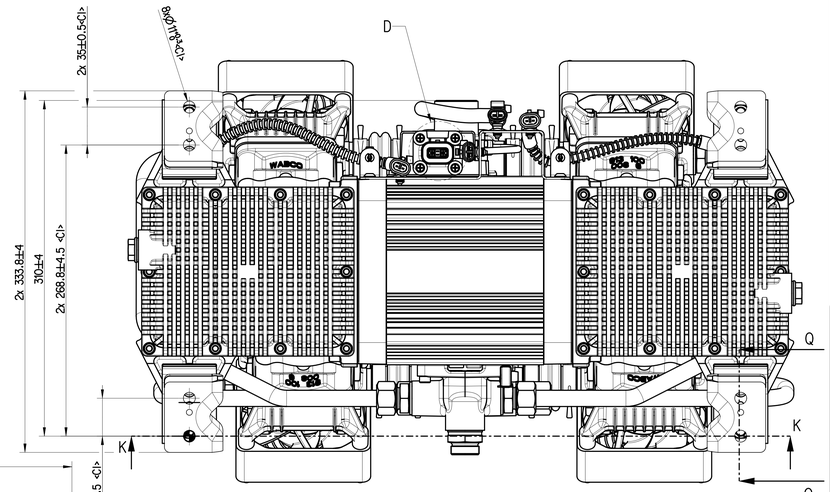

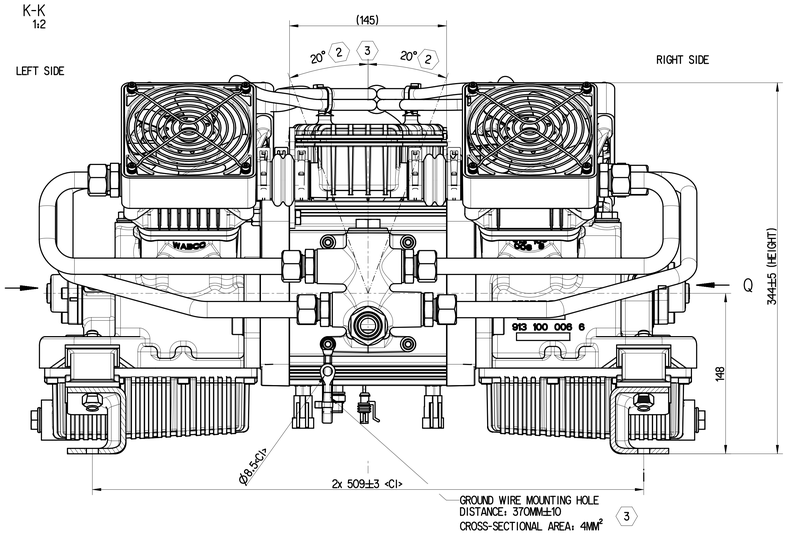

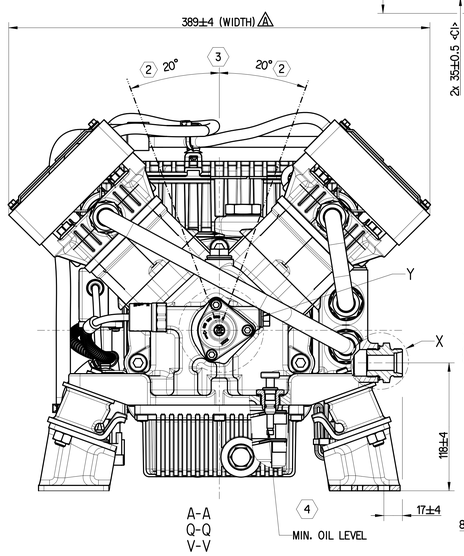

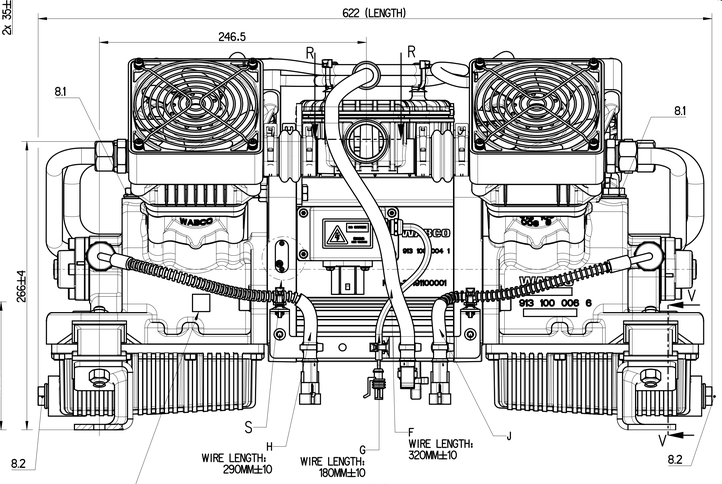

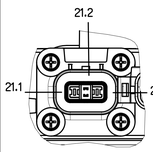

TE SOCKET		
HVA280 3P HEADER ASSY 3MM² (SPLIT) CODE B		
2-2310541-2 <CI>	HVA280 3P SPLIT HERAER ASSY KEY B	1
2103321-2	3P INNER HSG, SPLIT HDR, KEY B, HVA280	1
2-2141600-2	MCP2.8MM TERMINAL SILVER PLATED	3
HOLE CODING	21.1	21.2	21.3
DOWN-LEAD DEFINE	U	V	W
LEAD COLOR	YELLOW	GREEN	RED

MATCHING TE PLUG		
HVA280 3PHM PLUG ASSY 3x2.5MM² COROPLAST CODE B		
4-2103015-2	PLUG SUBASSY,B,HVA280-3PHM	1
2103306-1	INNER HOUSING,PLUG,HVA280-3PXM,XE	1
1-968851-3	AMP MCP 2.8, CONTACT	3
1-2103157-2	SHIELD, PLUG, SIZE 2, AG, HVA280	2
1587723-2	INNER FERRULE, SIZE B, HVA280-	1
1587724-2	OUTER FERRULE, SIZE B, HVA280	1
2103153-1	SPACER, HVA280-2PHM	1
2103154-2	CABLE SEAL, SIZE 2, HVA280	1
2103155-2	COLLET, SIZE 2, HVA280	1
2103013-2	CABLE SEAL RETAINER, SIZE 2, BK, HVA280	1

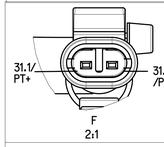

ELECTRICAL FAN CONNECTOR	
E-COMP CONNECTOR <CI>	VEHICLE CONNECTOR
HOUSING AMP 282080-1	HOUSING AMP 282104-1
TERMINALS AMP 282403-1	TERMINALS AMP 282404-1

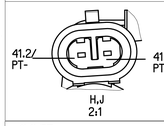

PRESSURE SWITCH CONNECTOR	
E-COMP CONNECTOR <CI>	VEHICLE CONNECTOR
HOUSING AMP 282104-1	HOUSING AMP 282080-1
TERMINALS AMP 282109-1	TERMINALS AMP 282110-1

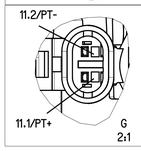

TEMPERATURE SENSOR CONNECTOR	
E-COMP CONNECTOR <CI>	VEHICLE CONNECTOR
HOUSING AMP 282080-1	HOUSING AMP 282104-1
TERMINALS AMP 282110-1	TERMINALS AMP 282109-1

- WARNING HIGH VOLTAGE

DEGREE OF PROTECTION: REFER PRODUCT SPECIFICAITON DOC. 035

ELECTRICAL GROUNDING NECESSARY

SWEPT VOLUME: 520 ccm

RATED WORKING SPEED (DEP. ON MOTOR SPEED): n= 1500min^{-1}

MAX. WORKING SPEED : n_{max}= 1500 min^{-1}

MIN. WORKING SPEED : n_{max}= 1000 min^{-1}

MAX. WORKING PRESSURE: P1 = 10 bar

MAX. PRESSURE AT DISCHARGE PORT: P = 12.5 bar

HORIZONTAL MOUNTING POSITION

LUBRICATION: INTERNAL LUBRICATION SYSTEM WITH REPLENISHMENT

OIL VOLUME: 1.0 LITER FOR EACH SIDE, TOTAL 2.0 LITER

MOUNTING SPACE REQUIREMENT: LENGTH x WIDTH x HEIGHT: 732mm x 502mm x 399mm

NOTE:

MOUNTING HOLE NEED TO BE OBLONG HOLES, DAMPER DEFLECTION AFTER ASSEMBLY IS NOT ALLOWED.

CABLE CONNECTOR POSITION ON VEHICLE NEED AUTHORIZED BY ZF CVS

(2) MAX. PERMISSIBLE TILT ANGLE DURING CONTINUOUS WORKING AT VEHICLE CONDITION

DATUM MOUNTING HOLE

(3) ONLY FOR CUSTOMER INFORMATION

(4) DIPSTICK FOR OIL LEVEL INDICATION

(1) DATA MATRIX CODE: REF DOC CODE 922

SIZE:MIN.10x10 / MAX.25x25
ADDITIONAL QUIET ZONE OF 2mm PER SIDE

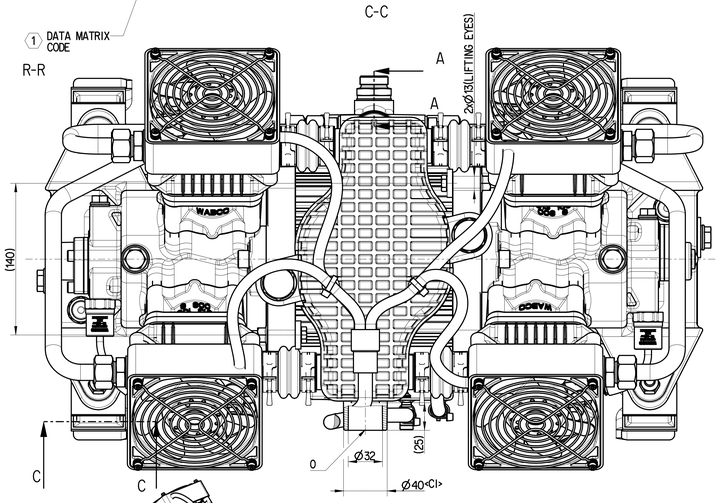

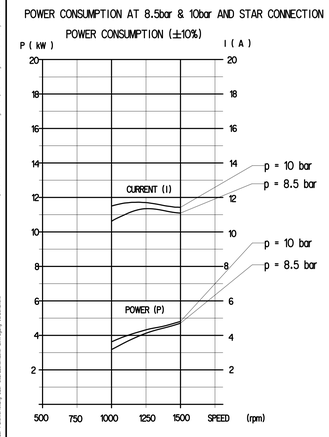

DUE TO RESONANCE COMPRESSOR SPEED RANGE 1050-1150rpm IS NOT RECOMMENDED

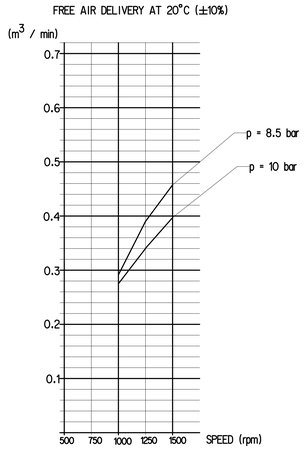

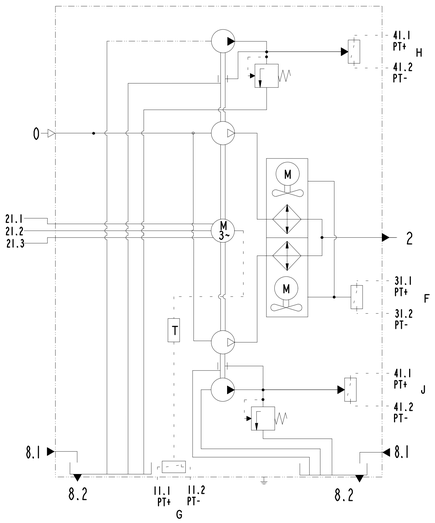

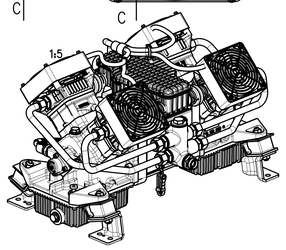

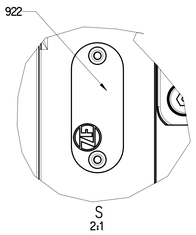

TORQUE REQUIREMENT (FOR CUSTOMER INSTALLATION)
0 : INLET PORT-SCREW CLAMP M= 5 ± 1 Nm
2 : DISCHARGE PORT M= 60 ± 7 Nm
8.1 : OIL REFILL M = 40 ± 4 Nm
8.2 : OIL DRAIN M = 40 ± 2 Nm

General Specifications: ISO 8015, JED-334-1, Size ISO 14405 LP				Copyright ZF®	
Further Technical Data: 913100005O				Date	Signature
Doc. Code:035		Sheet: 1 To 16		2024-10-15	Drawn GOPAL
General Tolerances JED-261				2024-10-18	Checked NI
Class 11	Range of nominal dimensions in mm: ≤ 50 / > 50 ≤ 180 / > 180 ≤ 400 / > 400			Dimensions in mm	
Fine	±0.5	±1	±1.5	±2	
Medium X	±1	±2	±3	±4	±3°
Coarse	±2	±3.5	±5	±6.5	
Tapped Holes acc.					
11 Tolerance Class Applied Crossmarked					

COMPRESSOR,E-DRIVEN

Mass	Scale	Material No.	Date of first issue: 2023-09-22
51.213 kg	1:2 (1x0.1x1.2x1)	913 100 005 0	Doc.Code 005 / Language EN / Sheet 1/1
Size A 0	CAD System CREO		Replacement for -

EDM No.	Revision	Techn. Resp.
516725	4 A	5103

100mm

Tutti i diritti, compresi quelli di traduzione, di riproduzione e di comunicazione a terzi, sono riservati a termini di legge. Il contenuto di questo documento non può essere utilizzato, riprodotto o comunicato a terzi senza il nostro consenso. Questo documento contiene informazioni proprietarie. Non divulgare a terzi senza autorizzazione scritta. Non copiare o riprodurre senza autorizzazione scritta.
Copyright of this document, given to ZF Friedrichshafen AG and being in force, even for the case of commercial rights of protection, is reserved. Disclosure to third parties without our consent is prohibited. This document contains proprietary information. Do not disclose to third parties without written consent. Do not copy or reproduce without written consent.