FIRST ANGLE PROJECTION.

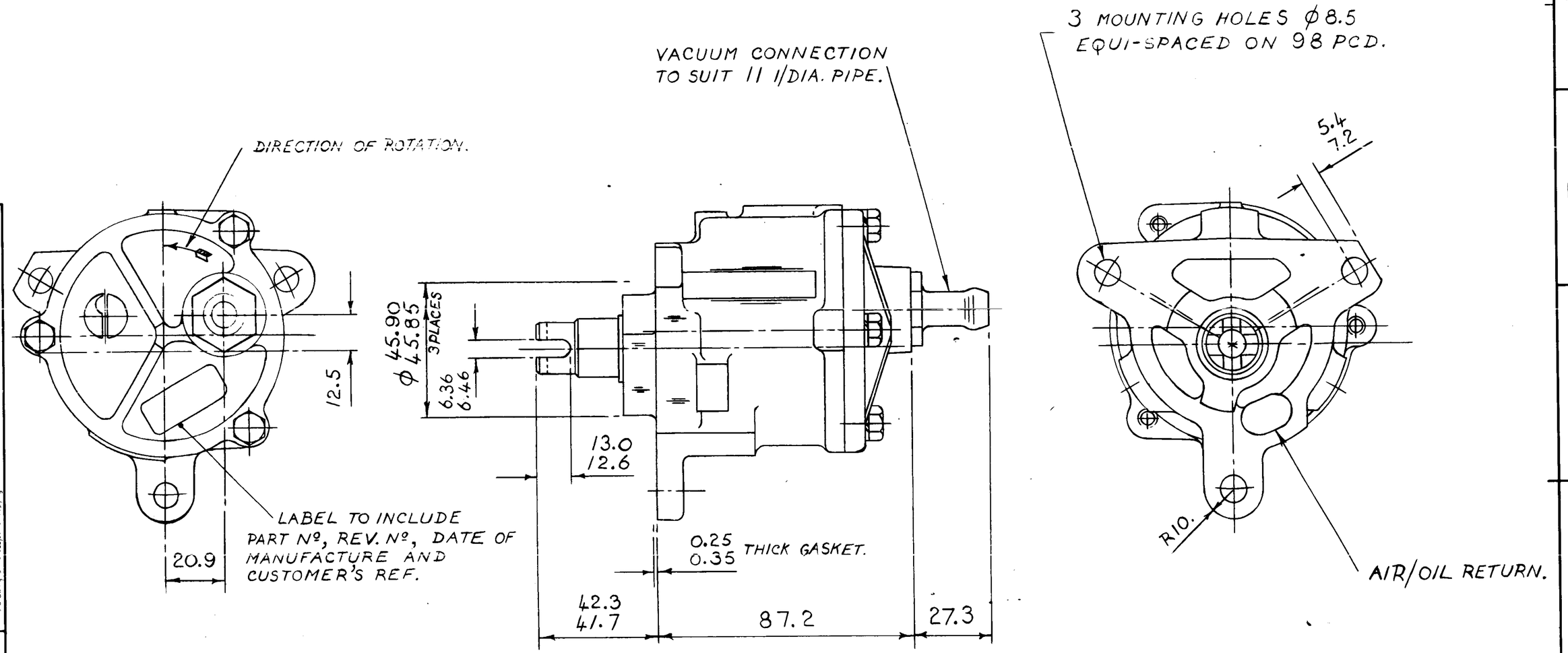

NOTE :- OPERATING TEMP. RANGE -40°c/135°C.
OIL SUPPLY PRESS. 1.0/5.0 bar.
MAX. CONTINUOUS SPEED 4000 RPM.

PERFORMANCE :- TIME TO EVACUATE A 2 LITRE RESERVOIR TO 0.7 bar AT 350 RPM. = 10 SECS. MAX. (20° AMBIENT/1.013 bar).
MIN. VACUUM LEVEL AT 2500 RPM. = 0.8 bar.

THE ASSEMBLY SHALL REMAIN IN AN OPERATING CONDITION AFTER BEING SUBJECTED TO BL TEST METHOD :- BLS 30 CT900 FOR 200 HRS.

ACCEPTED FOR PRODUCTION	DATE	SIGNATURE
	19-4-89	M.M.

FURTHER TECHNICAL DATA SEE
IDENTIFICATION Nº
CODE FOR DOCUMENT 605 SHEET

GENERAL TOLERANCES

CLASS	RANGE OF NOMINAL DIMENSIONS (± mm)				
	1)	≤ 50	> 50 ≤ 180	> 180 ≤ 400	> 400
I	*	0.5	1	1.5	2
II		1	2	3	4
III		2	3.5	5	6.5

1) TOLERANCE CLASS APPLIED CROSSMARKED

DEN Nº	REV	DATE
3164		2-11-90
2601	B	8/2/90
2232	A	16-12-88

MICROFILMED

	DATE	SIGNATURE
DRAWN	1-12-88	H Wade
CHECKED	27-2-89	R Deacon
STANDARDIZATION	10-3-89	

WABCO — CLAYTON DEWANDRE

VACUUM PUMP (95cc).

MASS	SCALE	PRODUCT IDENTIFICATION Nº	CODE FOR DOCUMENT	SHEET
kg	1:1	914 001 803 0	605	1/1
SIZE A2	TRF 300	CODE F PROD GROUP / CODE FOR SHAPE	REPLACEMENT FOR	

100 mm

Non è permesso consegnare a terzi o riprodurre questo documento, né utilizzarne il contenuto se non autorizzazione esplicita. Ogni infrazione costituisce un abuso e comporta il risarcimento dei danni subiti. Tutti i diritti riservati di tutti i disegni depositati da Brevetti e modelli.

Copying of this document and giving it to others and the use or communication of the contents thereof are forbidden without express authority. Offenders will be liable for damages. All rights are reserved in the event of the grant of a patent or the registration of a utility model or design.

Toute communication ou reproduction de ce document, toute exploitation ou communication de son contenu sont interdites sauf autorisation écrite. Tous droits réservés sur ce document en cas de brevet ou d'enregistrement d'un modèle de protection.

Weitergabe sowie Vervielfältigung dieser Unterlage, Verwertung und Mitteilung ihres Inhalts nicht gestattet soweit nicht ausdrücklich zugestanden. Zuwiderhandlungen stellen einen Offensichtlichen Mißbrauch dar und verpflichten zu Schadenersatz. Alle Rechte für den Fall der Patenterteilung oder Gebrauchsmuster Eintragung vorbehalten.

ADMEI B Y 317

CD2.5