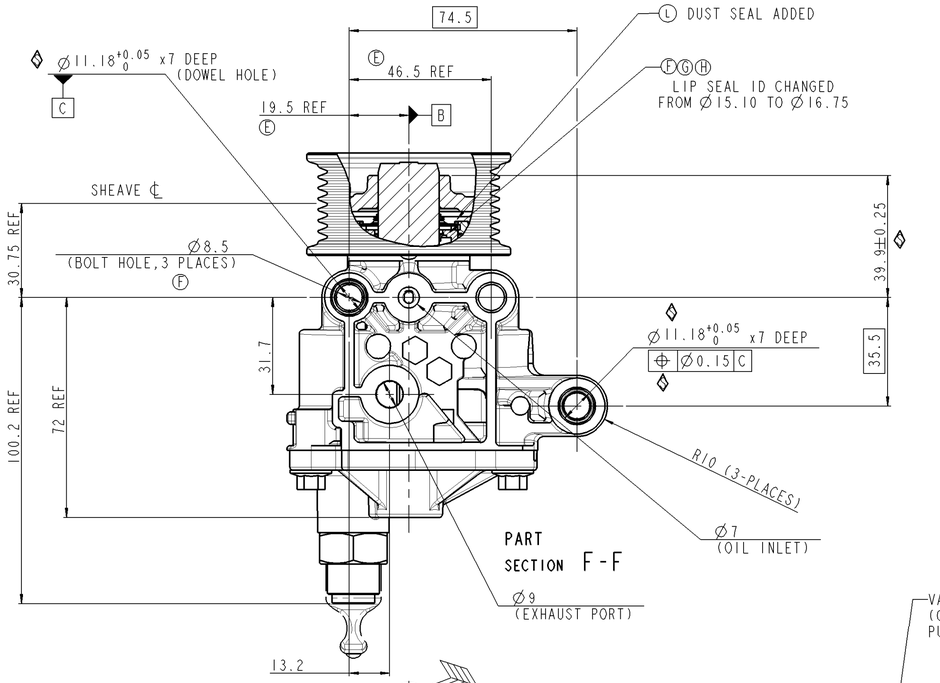

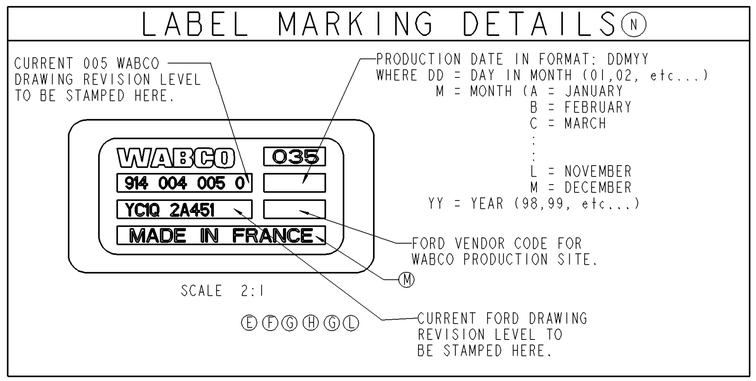

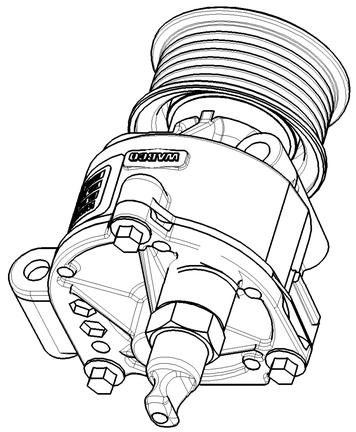

SCALE 1:1

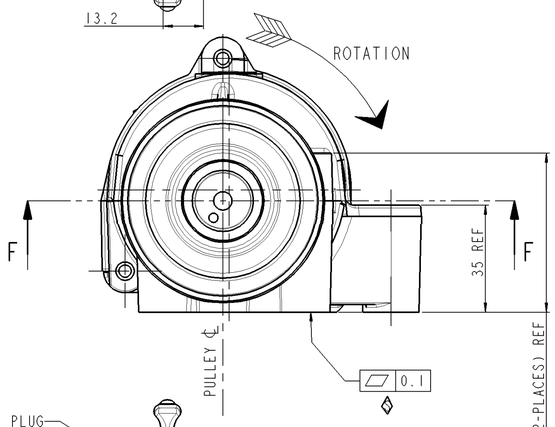

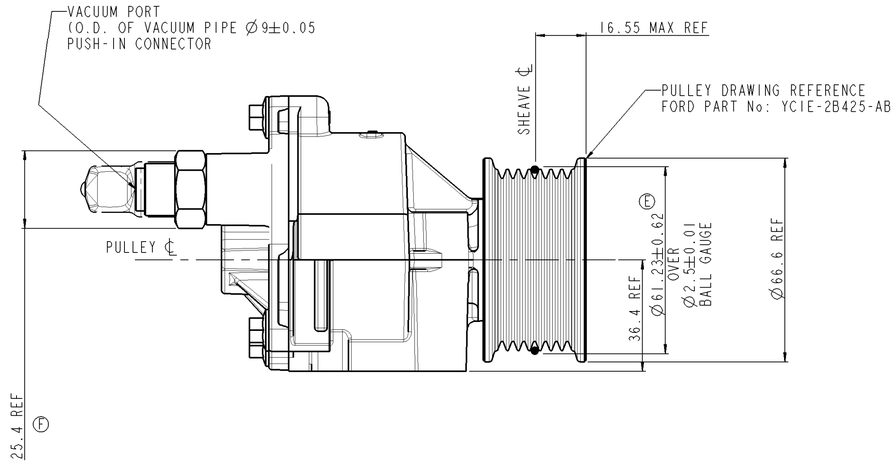

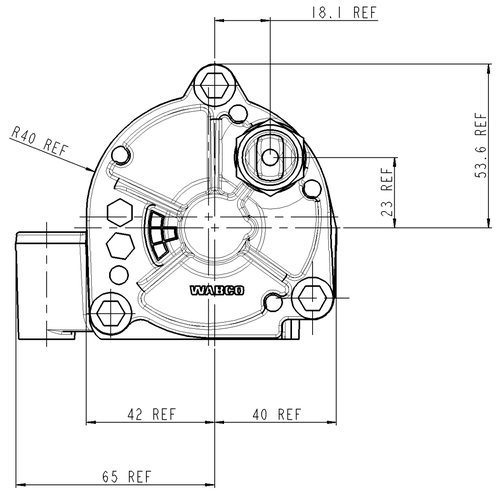

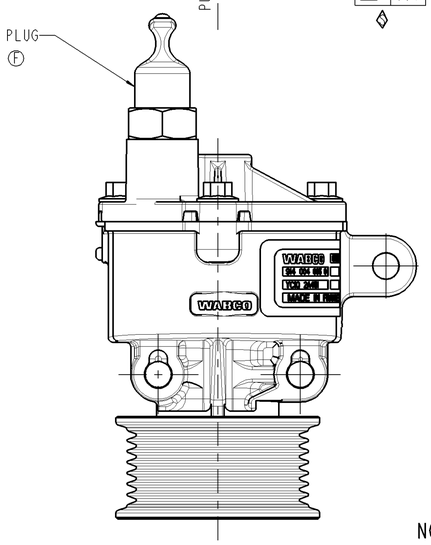

PERFORMANCE SPECIFICATION		
Vacuum Pump Speed (RPM)	Vacuum Level (kPa)	Evacuation Time (SECS)
2120	50 70 80	2.5 5.0 7.5
10560	50 70 80	1.5 2.5 4.0
RESERVOIR CAPACITY:		4 Litres
OIL SUPPLY PRESSURE:		1.0-4.0 BAR
OIL TEMPERATURE:		92°C-95°C

NOTE:- REVISION LEVEL OF DOCUMENT CODE NUMBERS
005 AND 006 TO BE KEPT IN LINE

General Specification: JED-334-0							
Further Technical Data:							
Doc. Code:				Sheet:		To	
General Tolerances JED-261							
	Range of Nominal Dimensions (± mm)						
Class 1)		≤ 50	> 50 ≤ 180	> 180 ≤ 400	> 400		
Fine		0.5	1.0	1.5	2.0		
Medium		1.0	2.0	3.0	4.0	±3°	
Coarse	X	2.0	3.5	5.0	6.5		
Tapped Holes acc.							
1) Tolerance Class Applied Crossmarked							

Copyright WABCO®

Date	Signature
Drawn 2009-09-28	Manno
Checked 2009-10-05	Taylor
Expert Heaps	

WABCO

VACUUM PUMP

Mass	Scale	Material No.	Date of first issue: 2005-11-02		
1.4 kG	1:1	914 004 005 0	Doc.Code 005	Language EN	Sheet 1/1
Size A 1	CAD System Pro/E				
ECN-No. 151246	Revision 1x N	Techn. Resp. 5531	Replacement for -		

100mm

Toute Communication ou reproduction de ce document, toute exploitation ou communication de son contenu sont interdites, sauf décision expresse. Tout manquement à cette règle constitue un délit, ouvrant le coupable au paiement de dommages et intérêts. Tous droits réservés, notamment en cas de dépôt de brevet.

Non è permesso consegnare o terzi o riprodurre questo documento, né utilizzare il contenuto o renderlo comunque noto a terzi senza autorizzazione esplicita. Ogni violazione comporta un obbligo di risarcimento danni. Tutti i diritti sono riservati, in particolare per il caso di brevetto o di registrazione.

Weitergabe sowie Vervielfältigung dieser Unterlage, Verwertung und Mitteilung ihres Inhalts nicht gestattet, soweit nicht ausdrücklich zugestanden. Zuwiderhandlungen stehen erlassrechtlichen Schadensersatz zur Verfügung. Es sind alle Rechte vorbehalten, insbesondere für den Fall der Patenterteilung oder Gebrauchsmustereintragung vorbehalten.

Copying of this document and giving it to others and the use or communication of the contents thereof, are forbidden without express authority. Contravention of this restriction will constitute an incident abuse and result in a liability to the payment of damages. All rights are reserved in the event of the grant of a patent or registration of a utility model or design. This document is the property of WABCO.