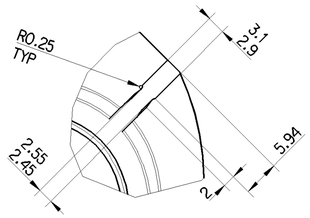

B
2:1

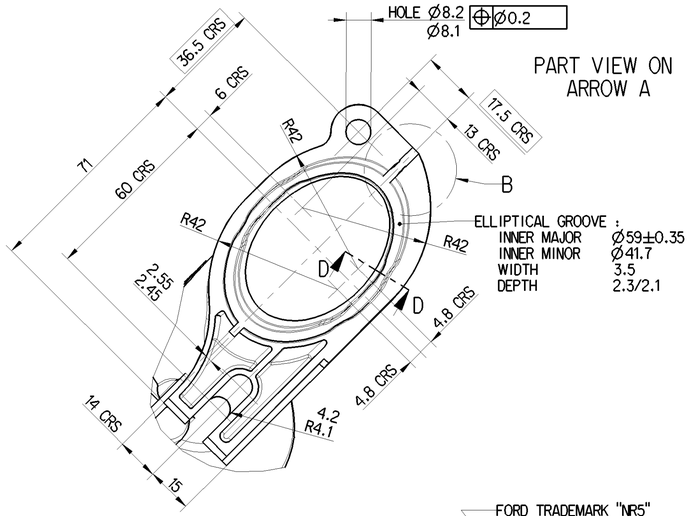

PART VIEW ON
ARROW A

PART VIEW ON
ARROW B

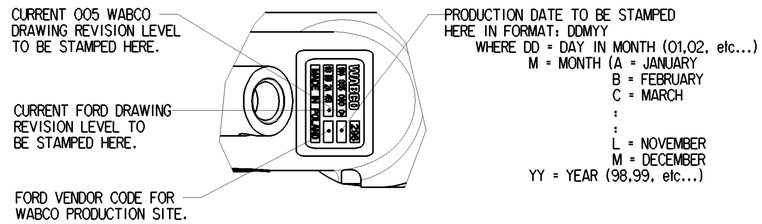

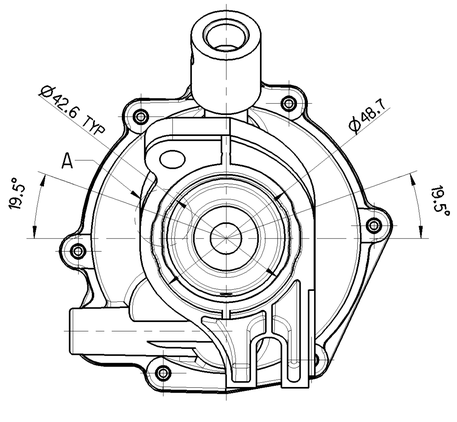

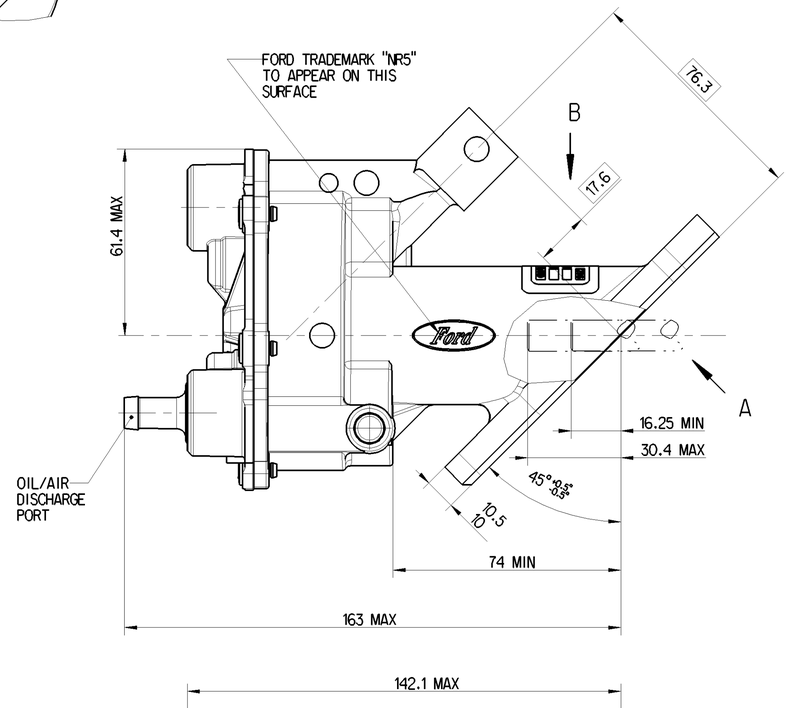

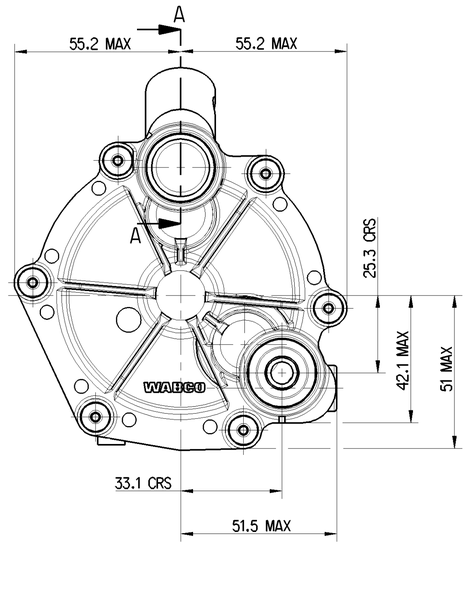

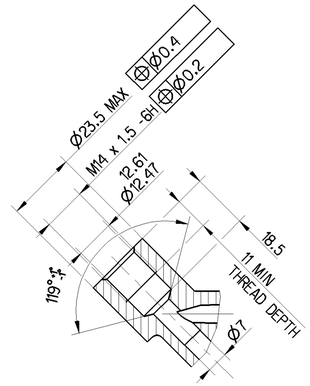

A-A
DETAIL OF VACUUM PORT

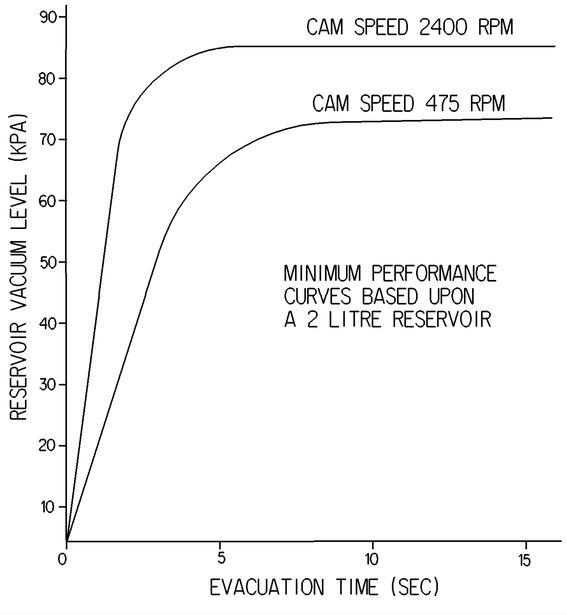

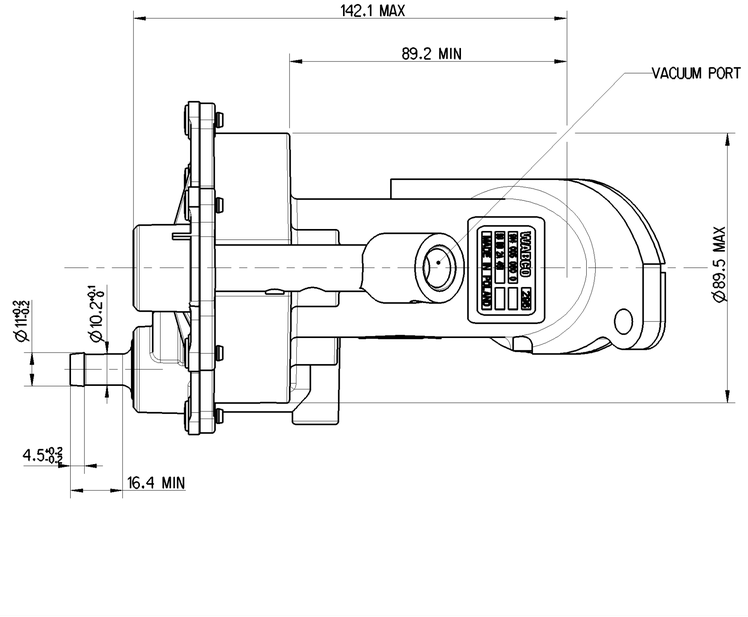

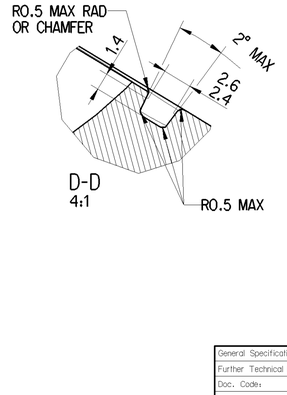

D-D
4:1

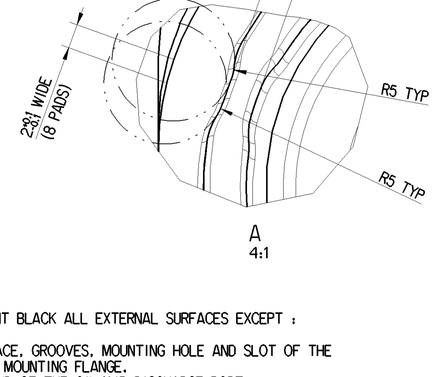

A
4:1

NOTE :
(X) WET PIANT BLACK ALL EXTERNAL SURFACES EXCEPT :

1) THE FACE, GROOVES, MOUNTING HOLE AND SLOT OF THE ENGINE MOUNTING FLANGE.
2) THE END OF THE OIL/AIR DISCHARGE PORT.
3) THE WABCO IDENTIFICATION LABEL.

General Specification: JED-334-0							
Further Technical Data:							
Doc. Code:			Sheet:		To		
General Tolerances JED-261							
		Range of Nominal Dimensions (± mm)					
Class 1)		≤ 50	> 50 ≤ 180	> 180 ≤ 400	> 400		
Fine	X	0.5	1.0	1.5	2.0	±3°	
Medium		1.0	2.0	3.0	4.0		
Coarse		2.0	3.5	5.0	6.5		
Tapped Holes acc. JED-152							
1) Tolerance Class Applied Crossmarked							

Copyright WABCO®

Date	Signature
Drawn 2020-01-27	Taylor
Checked 2020-01-28	Wellings
Expert HEAPS	

WABCO

VACUUM PUMP

Mass	Scale	Material No.	Date of first issue: 2009-05-06		
1.06 KG	1:1	914 005 060 0	Doc.-Code 005	Language EN	Sheet 1/1
Size A 1	CAD System Pro/E				

ECN-No.	Revision	Techn. Resp.	Replacement for
503005	1 X	5530	-

100mm

Toute Communication ou reproduction de ce document, toute exploitation ou communication de son contenu sont interdites, sauf autorisation écrite. Tous droits de propriété intellectuelle réservés, notamment en matière de brevets et de modèles.

Non è permesso consegnare o farne o riprodurre questo documento, né utilizzarne il contenuto o renderlo comunque noto o farlo conoscere a terzi senza esplicita autorizzazione. Tutti i diritti di proprietà intellectuale sono riservati, in particolare quelli di brevetto e di modello.

Weitergabe sowie Vervielfältigung dieser Unterlage, Verwertung und Mitteilung ihres Inhalts nicht gestattet, soweit nicht ausdrücklich zugestanden. Zuwiderhandlungen verpflichten zu Schadenersatz. Alle Rechte für den Fall der Patent- oder Gebrauchsmustereintragung vorbehalten.

Copying of this document and giving it to others and the use or communication of the contents thereof, are forbidden without express authority. Offenders are liable to the payment of damages. All rights are reserved in the event of the grant of patent or registration of a utility model or design. This document is the subject of copyright.

Erst. 9940000 / Version: *** / Index: *** / ma: 1 / 9000000___A02