| SURFACE PROTECT./OBERFL. SCHUTZ | | |
|---|---|---|
| I | JED-240-3 | (J) |
| II | JED-256-1 | (J) |
| III | JED-371 | |
| IV | Al;JED-259 | |
| V | GUMMI / KUNSTSTOFF | |
| VI | MS | |
| SONSTIGE TECHNISCHE INFORMATIONEN | | (K) |
| VII | 925 400 010 0 doc.535 (MAN) | |

MEDIUM : AIR
MEDIUM : LUFT
FLUIDE : AIR
FLUIDO : ARIA

NOMINAL DIAMETER :
NENNWEITE : MIN Ø8.5mm
DIAMETRE NOMINAL :
DIAMETRO NOMINALE :

THERMAL RANGE OF APPLICATION :
THERMISCHER ANWENDUNGSBEREICH : -40 °C...+80 °C
GAMME D'APPLICATION THERMIQUE :
CAMPO DI APPLICAZIONE TERMICA :

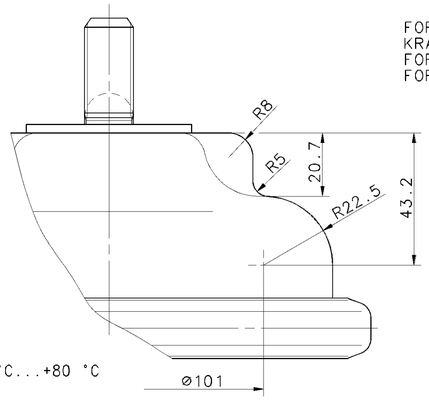


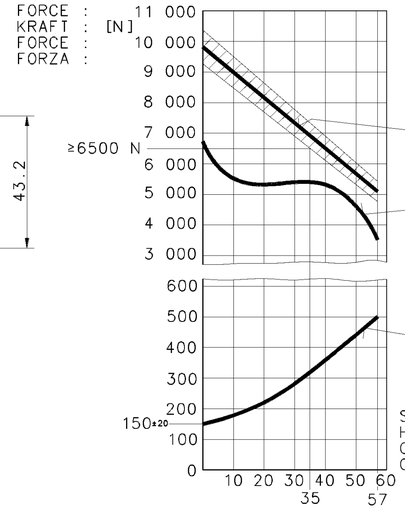


PORT : SERVICE BRAKING SYSTEM, WORKING PRESSURE
ANSCHLUSS : BETRIEBSBREMSANLAGE, BETRIEBSDRUCK
ORIFICE : DISPOSITIF DE FREINAGE DE SERVICE, PRESSION D'UTILISATION
ORIFIZIO : DISPOSITIVO DI FRENATURA DI SERVIZIO, PRESSIONE DI ESERCIZIO
**11** : Pe max.=10 bar (TEMPORARILY / KURZZEITIG / DE COURTE DUREE / BREVE TEMPO SOLO: Pe max.=13 bar)

PORT : SPRING BRAKE CYLINDER, WORKING PRESSURE
ANSCHLUSS : FEDERSPEICHERZYLINDER, BETRIEBSDRUCK
ORIFICE : CYLINDRE A RESSORT, PRESSION D'UTILISATION
ORIFIZIO : CILINDRO A MOLLA, PRESSIONE DI ESERCIZIO
**12** : Pe max.= 8.5 bar (TEMPORARILY / KURZZEITIG / DE COURTE DUREE / BREVE TEMPO SOLO: Pe max.=10 bar)

OUTPUT FORCE OF SPRING BRAKE PART, RELEASE PRESSURE
KRAFTABGABE DES FEDERSPEICHERS, LOESEDRUCK
EFFORT DE POUSSEE DU DISPOSITIF RESSORT, PRESSION DE DESSERRAGE
FORZA DI SPINTA DELLA SEZIONE A MOLLA, PRESSIONE DI RILASCIO
: pe 5.5±0.3 bar

OUTPUT FORCE OF SERVICE BRAKE PART AT
KRAFTABGABE DES BETRIEBSBREMSTEILES BEI
EFFORT DE POUSSEE DU DISPOSITIF DU FREIN DE SERVICE SOUS
FORZA DI SOINTA DELLA SEZIONE DI FRENO DI SERVIZIO PER
: 7.2 bar

FORCE OF RETURN SPRING OF SERVICE BRAKE PART
RUECKSTELLFEDERKRAFT DES BETRIEBSBREMSTEILES
EFFORT DU RESSORT DE RAPPEL DU DISPOSITIF DU FREIN DE SERVICE
FORZA DELLA MOLLA DI RITORNO DELLA SEZIONE DI FRENO DI SERVIZIO

*) SEALING SURFACE
DICHTFLAECHE
SURFACE D' ETANCHEITE
SUPERFICI DI TENUTA

**) OUT OF PLANE
VERSETZT GEZEICHNET
AU DEHORS DU PLAN DE PROJECTION
AL DI FUORI DEL PIANO DI PROIEZIONE

***) 1 BREATHER BORE
1 ATMUNGSBOHRUNG : Ø6
1 TROU RENIFLEUR
1 FORO RESPIRATORE

(K) ****) DEFLECTION: AT STROKE
AUSLENKUNG: max.8° BEI HUB 0 mm
DEFLEXION : A COURSE
DEVIAZIONE: A CORSA

WIDTH ACROSS FLATS
SW= SCHLUESSELWEITE
SURPLATS
LARGHEZZA IN CHIAVE

POSITIONING OF BREATHER TUBE IN UPPER RANGE MANDATORY
ATMUNGSROHR MUSS BEIM EINBAU IM OBEREN BEREICH ANGEORDNET WERDEN
AU MONTAGE POSITIONNER LE TUBE DE RESPIRATION DANS LA ZONE SUPERIEURE
PER IL MONTAGGIO SI DEVE DISPORRE IL TUBO RESPIRATORE NELLA ZONA SUPERIORA

TYPE DESIGNATION
TYPENBEZEICHNUNG
TYPE
TIPO DI DESIGNAZIONE

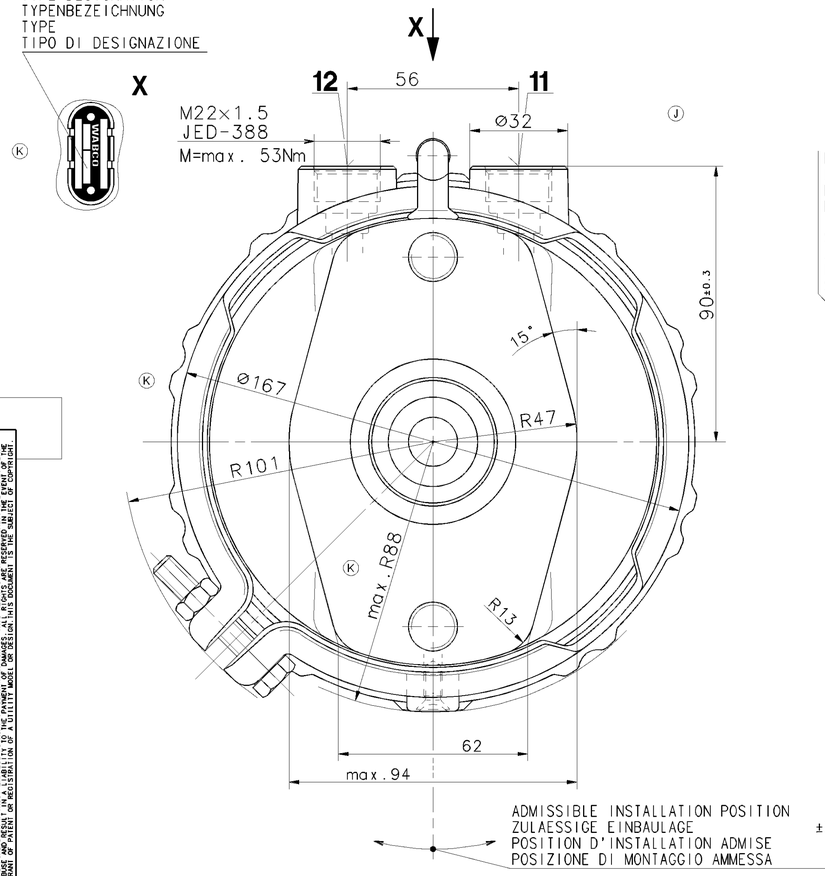


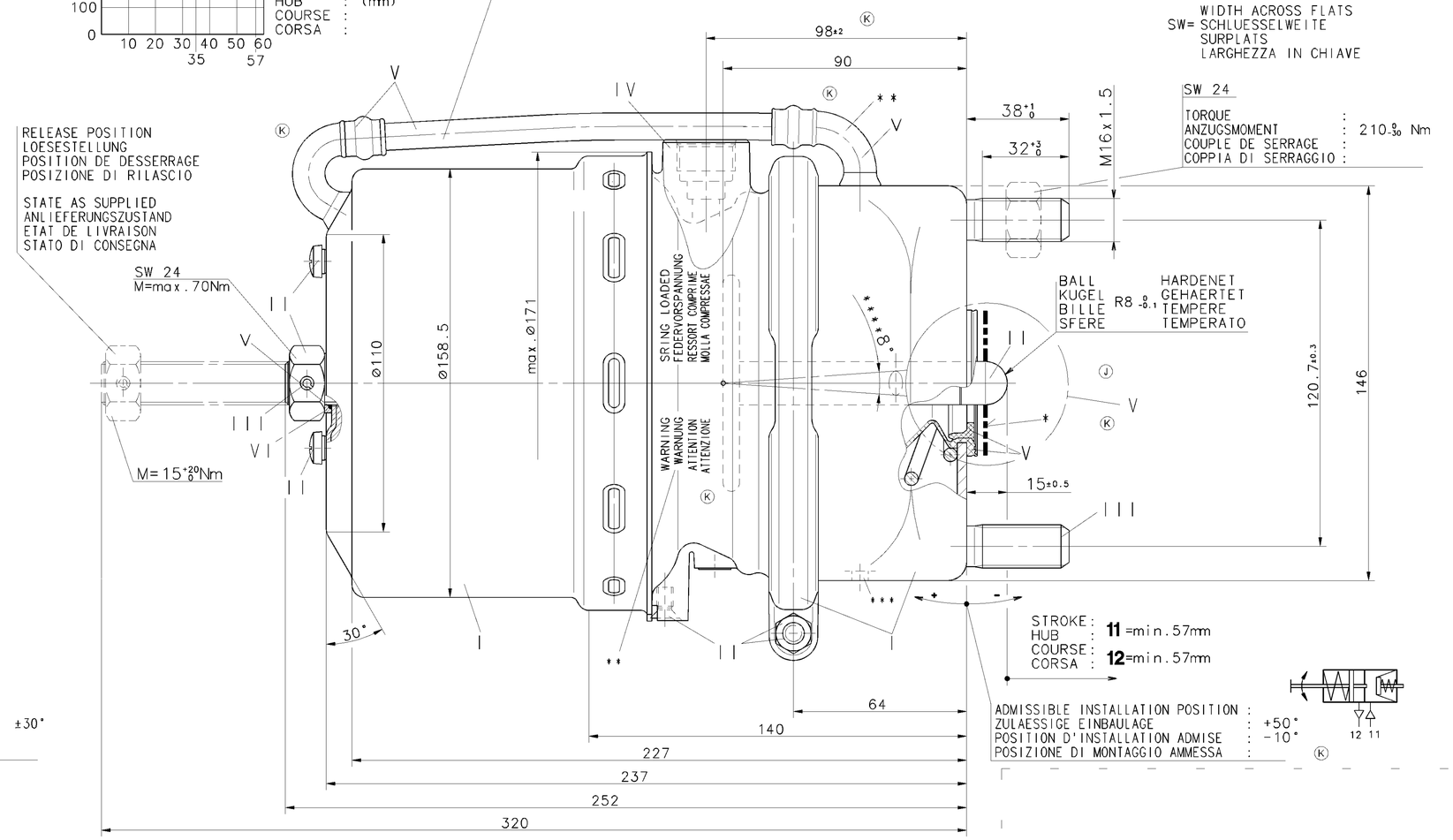


AIR VOLUME OF SERVICE BRAKE PART AT 2/3 OF ITS STROKE :
HUBVOLUMEN DES BETRIEBSBREMSTEILES BEI 2/3 HUB : ~ $0.54 \times 10^3$ $cm^3$
VOLUME D'AIR DU DISPOSITIF DU FREIN DE SERVICE A 2/3 DE LA COURSE :
VOLUME D'ARIA DELLA SEZIONE DI FRENO DI SERVIZIO A 2/3 DELLA CORSA :

AIR VOLUME OF SPRING BRAKE PART :
HUBVOLUMEN DES FEDERSPEICHERS : ~ $1.2 \times 10^3$ $cm^3$
VOLUME D'AIR DU DISPOSITIF RESSORT :
VOLUME D'ARIA DELLA SEZIONE A MOLLA :

| 925 426 100 0 | 925 426 101 0 |
|---|---|

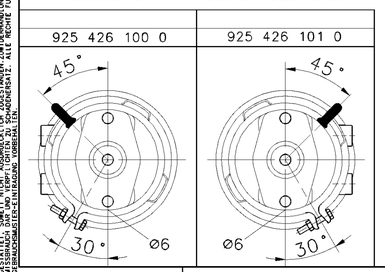


| | | | | |
|---|---|---|---|---|
| 925 426 101 0 | | | 12/6500 | ~7 |
| 925 426 100 0 | | | 12/6500 | ~7 |
| WABCO | CUSTOMER'S NO. KUNDEN-NR. No. CLIENT No. CLIENTE | | TYPE TYP TYPE TIPO | MASS GEWICHT MASSE MASSA (kg) |
| IDENTIFICATION | | | | |

| GENERAL SPECIFICATION: JED-334 | | | | | |
|---|---|---|---|---|---|
| FURTHER TECHNICAL DATA: | | | | | |
| DOC. CODE: | | SHEET: 10 | | | |
| GENERAL TOLERANCES | | | | | |
| RANGE OF NOMINAL DIMENSIONS ( ± mm ) | | | | | |
| CLASS 1) | ≤50 | > 50 ≤180 | >180 ≤400 | >400 | |
| FINE | | 0,5 | 1,0 | 1,5 | 2,0 |
| MEDIUM | X | 1,0 | 2,0 | 3,0 | 4,0 ± 3° |
| COARSE | | 2,0 | 3,5 | 5,0 | 6,5 |
| TAPPED HOLES ACC. ISO 4039 / JED-152 | | | | | |
| 1) TOLERANCE CLASS APPLIED CROSSMARKED | | | | | |

| DCN-NO. | REV. | DATE |
|---|---|---|
| 076735 | 12×K | 00-10-05 |
| 074957 | 4×J | 00-05-29 |
| 071015 | 3×H | 99-04-15 |
| 066190 | 1×G | 98-03-03 |
| 064954 | 2×F | 97-10-17 |
| 064946 | 1×E | 97-10-15 |
| 064940 | 4×D | 97-10-10 |
| 058043 | 1×C | 95-06-29 |
| 056925 | 1×B | 95-01-02 |
| 056920 | 1×A | 94-12-14 |

CADAM-DRAWING COPYRIGHT

| DATE | SIGNATURE |
|---|---|
| DRAWN: 94-12-02 | GLOGOWSCHEK |
| CHECKED: 94-12-02 | RISCHER |
| STANDARDIZATION: 94-12-02 | PANTZER |

**WABCO**

TRISTOP® -BRAKE ACTUATOR
TRISTOP® -ZYLINDER 12/16
CYLINDRE-TRISTOP®
CILINDRO-TRISTOP®

| MASS | SCALE | PRODUCT IDENTIFICATION NO. | DOC. CODE | SHEET |
|---|---|---|---|---|
| KG | 1:1 | 925 426 109 0 | 653 | 1/1 |
| SIZE A 1 | T.R.I. 185 | | SHAPE CODE | REPLACEMENT FOR |

100mm

EXPERT CODE 7 4 8

PRODUCT TYPE

TOUTE COMMUNICATION OU REPRODUCTION DE CE DOCUMENT, TOUTE EXPLOITATION OU COMMUNICATION DE SON CONTENU NON E' PERMESSO CONSEGNARE A TERZI O RIPRODURRE QUESTO DOCUMENTO, NE UTILIZZARNE IL CONTENUTO O RENDERNE NOTO IL CONTENUTO, SAUF AUTORISATION ECRITE. TOUS DROITS DE PROPRIETE INTELLECTUELLE ABUSO SEGUE RISARCIMENTO DI DANNI. TUTTI I DIRITTI DERIVANTI DA BREVETTO O MODELLO DI UTILITÀ RESTANO RISERVATI.
WEITERGABE SOWIE VERVIELFÄLTIGUNG DIESER UNTERLAGE, VERWERTUNG UND MITTEILUNG IHres INHALTS NICHT GESTATTET, SOWEIT NICHT AUSDRÜCKLICH ZU ZUGESTANDEN. ZUWIDERHANDLUNGEN VERPFLICHTEN ZU SCHADENSERSATZ. DURCH PATENT- OD. GEBRAUCHSMUSTER- EINTRAGUNG VORBEHALTEN.
COPYING OF THIS DOCUMENT AND GIVING IT TO OTHERS AND THE USE OR COMMUNICATION OF THE CONTENTS THEREOF ARE FORBIDDEN. ALL RIGHTS ARE RESERVED IN THE EVENT OF THE GRANTING OF A PATENT OR THE REGISTRATION OF A UTILITY MODEL OR DESIGN THIS DOCUMENT IS THE SUBJECT OF COPYRIGHT.