EXTERNAL SURFACE AEUSSERE OBERFLAECHE SURFACE EXTERIEURE SUPERFICIE ESTERNA	Ⓑ
I	JED-259
II	JED-256
III	JED-471 BLACK/SCHWARZ NOIR/NERO
IV	JED-CLASS KLASSE 25

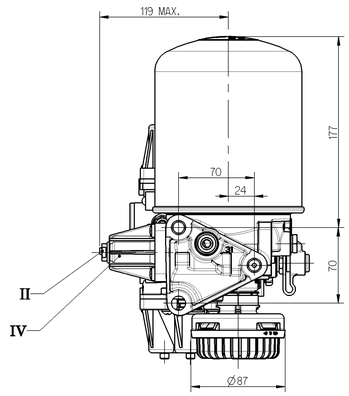

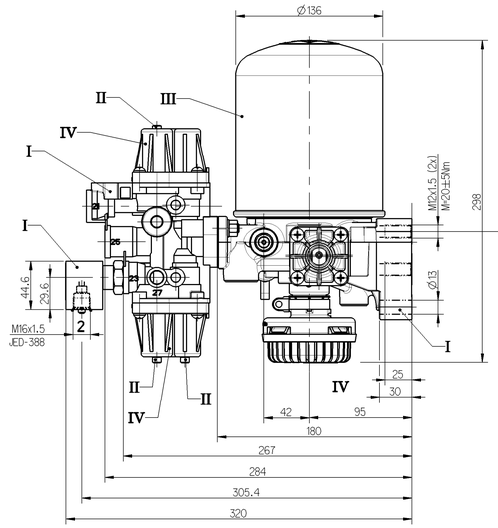

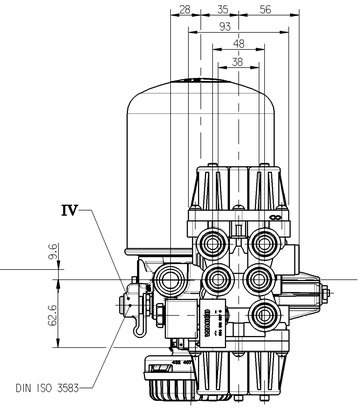

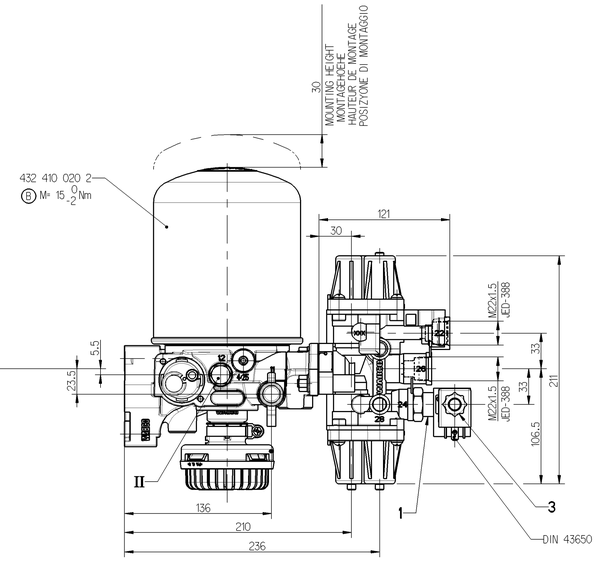

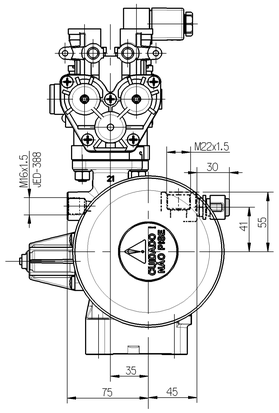

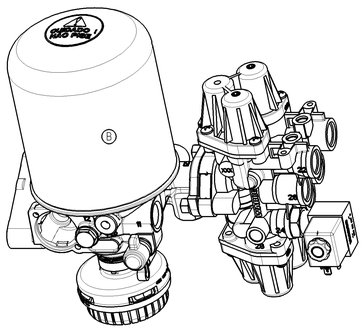

AIR DRYER LUFTTROCKNER DESSICATEUR D'AIR ESSICATORE D'ARIA			FOUR CIRCUIT PROTECTION VALVE VIERKREIS-SCHUTZVENTIL VALVE DE PROTECTION (A 4 CIRCUITS) VALVOLA DI PROTEZIONE (A 4 CIRC.)				SOLENOID VALVE VENTILMAGNET ELECTROVANNE ELETTROVALVOLA	
PORT ANSCHLUSS ORIFICE ORIFIZIO	FUNCTION FUNCTION FONCTION FUNZIONE	THREAD GEWINDE FILETAGE FILETTAURA	PORT ANSCHLUSS ORIFICE ORIFIZIO	FUNCTION FUNCTION FONCTION FUNZIONE	THREAD GEWINDE FILETAGE FILETTAURA	CIRCUIT KREIS CIRCUIT CIRCUITO	PORT ANSCHLUSS ORIFICE ORIFIZIO	FUNCTION FUNCTION FONCTION FUNZIONE
11	FROM THE COMPRESSOR VOM KOMPRESSOR PROVENANTE DU COMPRESSEUR PROVENIENTE DEL COMPRESSORE	M22x1.5 JED-152	1	FROM AIR DRYER VOM LUFTTROCKNER DE DESSICCATEUR D'AIR ESSICATORE D'ARIA			1	SUPPLY ENERGIEZUFLUSS VOM VORRAT ALIMENTATION ALIMENTAZONE
12	EXTERNAL FILLING FREMDBEFUELLUNG ALIMENTATION DE L'EXTERIEUR ALIMENTAZIONE SEPARATA		21		M22x1.5 JED-388	1	2	DELIVERY ENERGIEABFLUSS IN DIE ARBEITSLEITUNG UTILISATION MANDATA
21	TO PROTECTION VALVE ZUM SCHUTZVENTIL AU VALVE DE PROTECTION A VALVOLA DI PROTEZIONE	M22x1.5 JED-152	22		M22x1.5 JED-388	2	3	EXHAUST ANSCHLUSS ATMOSPHAERE ECHAPPMENT SCARICO
22	TO THE RESERVOIR FOR REGENERATION AIR ZUM REGENERATIONS-LUFTBEHAELTER AUX RESERVOIRS D' AIR DE REGENERATION AL SERBATOII PER L'ARIA RIGENERATA	M16x1.5 JED-388	23.25		M22x1.5 JED-388	3	THERMAL RANGE OF APPLICATION THERMISCHER ANWENDUNGSBEREICH GAMENE D'UTILIZATION THERMIQUE¹ TEMPERATURA DI ESERCIZIO	-40°C...+80°C
23	TIRE INFLATION DEVICE REIFENFUELLANSCHLUSS PRISE POUR GONFLAGE PNEU PRESA PER GONFIAGGIO PNEUM.	M16x1.5 JED-152	24.26		M22x1.5 JED-388	4	WORKING PRESSURE MAX. BETRIEBSDRUCK MAX. PRESSION D'UTILISATION MAX.¹ PRESSION DI ESERCIZIO MAX.	10.5bar
3	EXHAUST FOR COMPRESSOR IDILING ENTLUEFTUNG BEI KOMPRESSOR-LEERLAUF ECHAPPEMENT POUR MARCHE A VIDE DU COMPRESSEUR SCARICO PER MARCIA A FOLLE DEL COMPRESSORE	Ⓑ SILENCER 432407012 0	PRESSURE DRUCK PRESSION PRESSIONE (bar)		CIRCUIT KREIS CIRCUIT CIRCUITO 1+2	CIRCUIT KREIS CIRCUIT CIRCUITO 3+4	VOLTAGE SPANNUNG VOLTAGE ¹ VOLTAGGIO	24VDC
31	EXHAUST OF THE SAFETY VALVE ENTLUEFTUNG DES SICHERHEITSVENTILES ECHAPPEMENT DE LA SOUPAPE DE SECURITE SCARICO DELLA VALVOLA DI SICUREZZA		OPENING PRESSURE OEFFNUNGSDRUCK PRESSION D'OUVERTURE PRESSIONE DI APERTURE dyn.		$9.0^{0}_{-0.3}$	$7.5^{0}_{-0.3}$	NOMINAL DIAMETER NENNWEITE DIAMETRE NOMINAL¹ DIAMETRO NOMINALE	Ø1.2mm
OPENING PRESSURE SAFETY VALVE OEFFNUNGSDRUCK SICHERHEITSVENTIL PRESSION D'OUVERTURE SOUPAPE DE SECURITE PRESSIONE D'APERTURA VALVOLA DI SICUREZZA		$14.5^{+2.5}_{0}$ (bar)	CLOSING PRESSURE SCHLIESSDRUCK PRESSION DE FERMETURE PRESSIONE DI CHIUSURA dyn.		≥ 7.0	≥ 4.5		
			PRESSURE LIMITING DRUCKBEGRENZUNG LIMITATION DE PRESSION LIMITAZIONE DI PRESSIONE		——	$8.5^{0}_{-0.4}$		

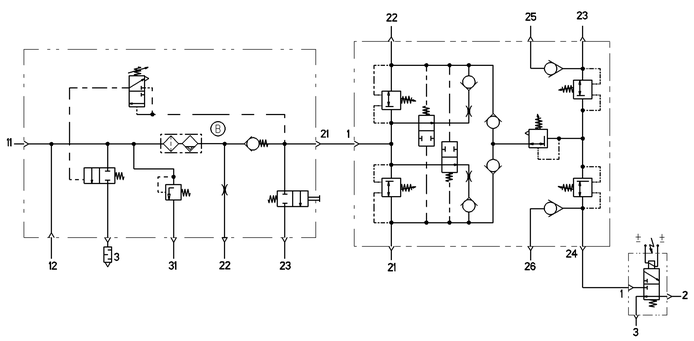

THERMAL RANGE OF CONTINUOUS APPLICATION THERMISCHER DAUERANWENDUNGSBEREICH PLAGE DE TEMPERATURE EN UTILISATION CONTINUE¹ CONPO DI APPLICAZIONE CONTINUA	-40°C...+65°C	COMBINED UNLOADER DRUCKREGLER REGULATEUR DE PRESSION¹ GRUPPO DI REGULAZIONE	
RESISTANCE TO HEAT WAERMEBESTAENDIGKEIT RESISTANCE A LA CHALEUR¹ RESISTANZA AL CALORE	MAX. +80°C	CUT OUT PRESSURE ABSCHALTDRUCK PRESSION D'OUVERTURE¹ PRESSIONE D'APERATURA	10±0.2bar
MEDIUM: COMPRESSED AIR MEDIUM: DRUCKLUFT FLUIDE: AIR COMPRIME FLUIDO: ARIA COMPRESSA		OPERATING RANGE SCHALTSPANNE PLAGE DE REGULATION¹ GAMME DI REGULAZIONE	$0.7^{+0.6}_{0}$ bar
WORKING PRESSURE BETRIEBSDRUCK PRESSION DE SERVICE¹ PRESSIONE D'ESERCIZIO	p_eMAX. = 13bar	INSTALLATION POSITION AS DRAW EINBAULAGE WIE GEZEICHNET POSITION D'INSTALLATION SUIVANT DESSIN POSIZIONE DI MONTAGGIO COME DISEGNATO	
MAX. PERMISSIBLE ACELERATION MAX. ZULAESSIGE BESCHLEUNIGUNG ACCELERATION MAX. ADMISSIBLE ¹ ACCELERAZIONE MAX. AMMESSA	±15xg		
MAX.PERMISSIBLEFREQUENCY MAX. ZULAESSIGE FREQUENZ MAX. ADMISSIBLE FREQUENCE¹ MAX. AMMISSIBLE FREQUENZA	50 Hz		

General Specification: JED-334-O ; Size ISO 14405-1 E						Copyright WABCO®	WABCO
Further Technical Data:						Date / Signature	
Doc. Code:			Sheet:		To	Drawn: 2013-07-30 Marek	AIR PROCESSING UNIT DRUCKLUFTAUFBEREITUNG UNITE COMPACTE UNITA COMPATTA
General Tolerances JED-261						Checked: 2013-08-19 Chamot	
	Range of Nominal Dimensions (in mm)					Expert: CHAMOT	
Class 11	≤ 50	> 50 ≤ 180	> 180 ≤ 400	> 400		Mass: 6.7 kg	Scale: 1:2
Fine	0.5	1.0	1.5	2.0	±3°	Material No.: 932 500 030 0	Doc.Code: 005 / Language: ML / Sheet: 1/1
Medium X	1.0	2.0	3.0	4.0		Size: A 0	CAD System: Pro/E
Coarse	2.0	3.5	5.0	6.5		ECN No.: 160456	Revision: 5 x B
Tapped Holes acc.: ISO 4029 / JED-152						Techn. Resp.: 5110	Replacement for: 8845034380 OF 99-09-10
11 Tolerance Class Applied Crossmarked							100mm

Sub-licensees are responsible for the correct use of the data and information contained in this document. Copyright of this document is held by WABCO and all rights are reserved. Any reproduction or publication of the contents, in whole or in part, without WABCO's consent is prohibited. Any infringement will be prosecuted and may result in the payment of damages. The copyright notice and any other notices and rights of ownership in this document shall not be removed, obscured or altered. Copyright of the software is held by WABCO and all rights are reserved. Any reproduction or publication of the software, in whole or in part, without WABCO's consent is prohibited. Any infringement will be prosecuted and may result in the payment of damages. The copyright notice and any other notices and rights of ownership in the software shall not be removed, obscured or altered. Copyright of any open source software used in conjunction with the software is held by the respective copyright owners.