PART CODE	MATERIAL	SURFACE PROTECTION
I	ALUMINIUM ALLOY	CHROMATED
II	STEEL	ZINK PLATED
III	STEEL	PAINTED
IV	PLASTIC	NO TREATMENT
V	BRASS	SILVER COATING
VI	ZINC ALLOY	PASSIVATED

WABCO AIR PROCESSING UNIT	WABCO AIR DRYER	BACK FLOW LIMITING VALVE dP = (bar)	COMBINED UNLOADER CUT OUT PRESSURE Pe = (bar)	COMBINED UNLOADER OPERATING RANGE OR = (bar)	SAFETY PRESSURE OF THE PURGE VALVE AT $V_N^* = 100\ dm^3/min$
932 500 035 0	432 415 904 0	0.50 ±0.05	8.5 ±0.2	$0.7\ ^{+0.5}_{0}$	$14\ ^{+3}_{0}$

WABCO QUAD-VALVE 934 714 151 0					
PORTS ORFICES / ANSHLUESSE ATTACCHI		21	22	23	24
OPENING PRESSURE DYNAMIC OEFFNUNGSDRUCK DYNAMISCH PRESSION DE OUVERTURE DYNAM PRESSIONE DI APERTURA DINAM	BAR	$6.5^{+0}_{-0.3}$	$6.5^{+0}_{-0.3}$	$7.5^{+0}_{-0.3}$	$6.5^{+0}_{-0.3}$
CLOSING PRESSURE DYNAMIC SCHLIESSDRUCK DYNAMISCH PRESSION DE FERMETURE DYNAM PRESSIONE DI CHIUSURA DINAM	BAR	≧6.0			
CLOSING PRESSURE STATIC AT FAILURE OF CIRCUIT .... SCHLIESSDRUCK STATISCH BEI AUSFALL VON KREIS .... PRESSION DE FERMETURE STATIQUE EN CAS DE DEFAILLANCE DU CIRCUIT .... PRESSIONE DI CHIUSURA STATICA IN CASO DI DIFETTO DEL CIRCUITO	BAR	0	≧5.0	#	≧5.0
		≧5.0	0	≧5.0	≧5.0
		≧5.0	≧5.0	0	≧5.0
		≧5.0	≧5.0	≧5.0	0

AIR DRYER LUFTTROCKNER DESSICATEUR D' AIR ESSICATORE D' ARIA	432 415 904 0	
PORT ANSCHLUSS ORIFICE ORIFIZIO	FUNCTION FUNCTION FONCTION FUNZIONE	THREAD GEWINDE FILETAGE FILETTAURA
1	FROM THE COMPRESSOR VOM KOMPRESSOR PROVENANT DU COMPRESSEUR PROVENIENTE DEL COMPRESSORE	M22x1.5 d=15
(21)	TO THE RESERVOIRS ZU DEN LUFTBEHAEL TERN AUX RESERVOIR AL SERBATOII PER	M22x1.5 d=45.3
3	EXHAUST FOR COMPRESSED AIR ENTLUEFTUNG FUER DRUCKLUFT ECHAPPEMENT POUR AIR COMPRIME SCARICO PER AIRIA COMPRESSA	SILENCER 432 407 015 0
4	TO THE COMPRESSOR / CLOSED ZUM KOMPRESSOR / VERSCHLOSSEN AU COMPRESSEUR / FERME AL COMPRESSORE / CHIUSO	M12x1.5 d=12
6	HEATING HEIZUNG CHAUFFAGE RISCALDAMENTO	M27x1

QUAD CIRCUIT PROTECTION VALVE VIERKREIS -SCHUTZVENTIL VALVE DE PROTECTION LA 4 CIRCUITS VALVOLA DI PROTEZIONE LA 4 CIRCUITI	934 714 151 0	
PORT ANSCHLUSS ORIFICE ORIFIZIO	FUNCTION FUNCTION FONCTION FUNZIONE	THREAD GEWINDE FILETAGE FILETTAURA
(1)	SUPPLY LUFTEINTRITT ALIMENTATION ALIMENTAZIONE	–
21	CIRCUIT 1 KREIS 1 CIRCUIT 1 CIRCUITO 1	M16x1.5 d=13
22	CIRCUIT 2 KREIS 2 CIRCUIT 2 CIRCUITO 2	M16x1.5 d=13
23	CIRCUIT 3 KREIS 3 CIRCUIT 3 CIRCUITO 3	M16x1.5 d=13
24	CIRCUIT 4 KREIS 4 CIRCUIT 4 CIRCUITO 4	M16x1.5 d=13

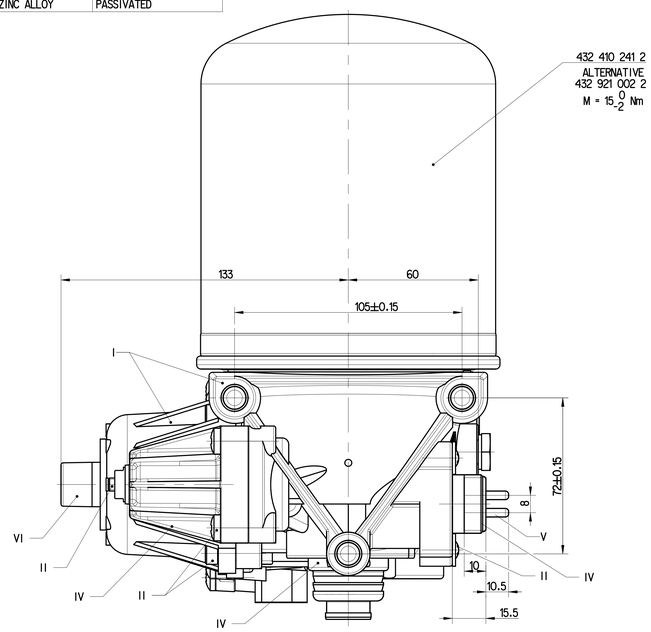

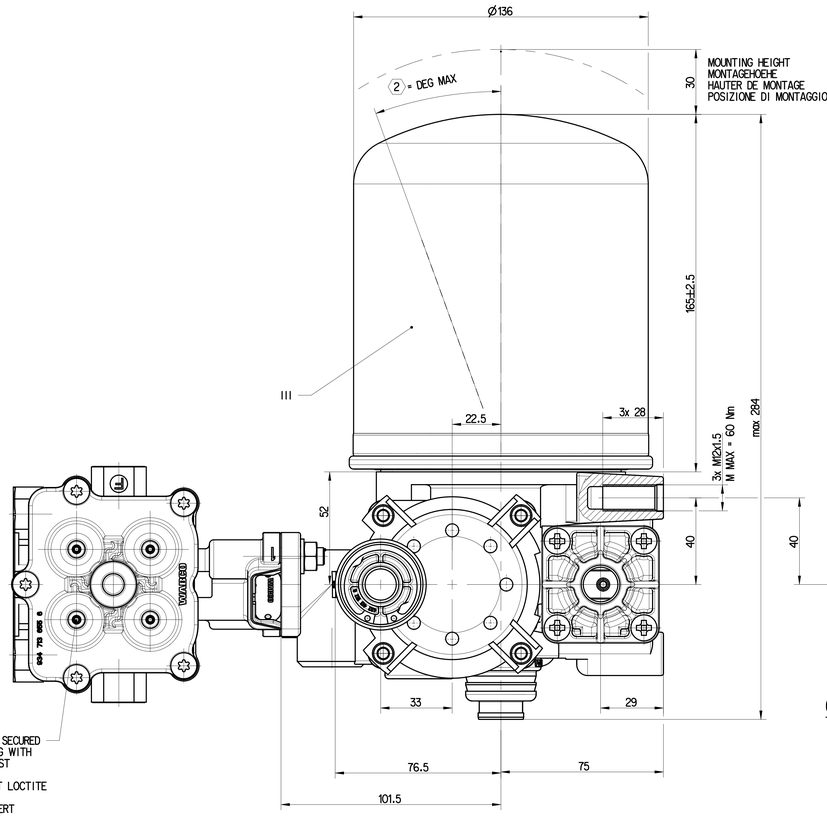

ADJUSTING SCREWS SECURED AGAINST TAMPERING WITH LOCTITE AFTER TEST

NACH PRUEFUNG MIT LOCTITE GEGEN UNBEFUGTE EINGRIFFE GESICHERT

VIS DE REGLAGE FIXEES AVEC LOCTITE PAR SECURITE APRES ESSAI

VITI DI REGOLAZIONE FISSATE CONTRO MANOMISSIONE CON LOCTITE DOPO LE PROVE

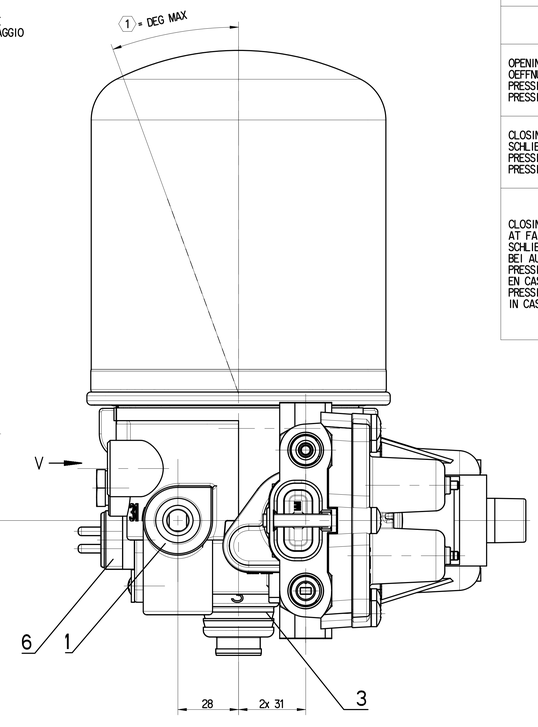

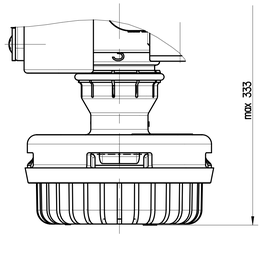

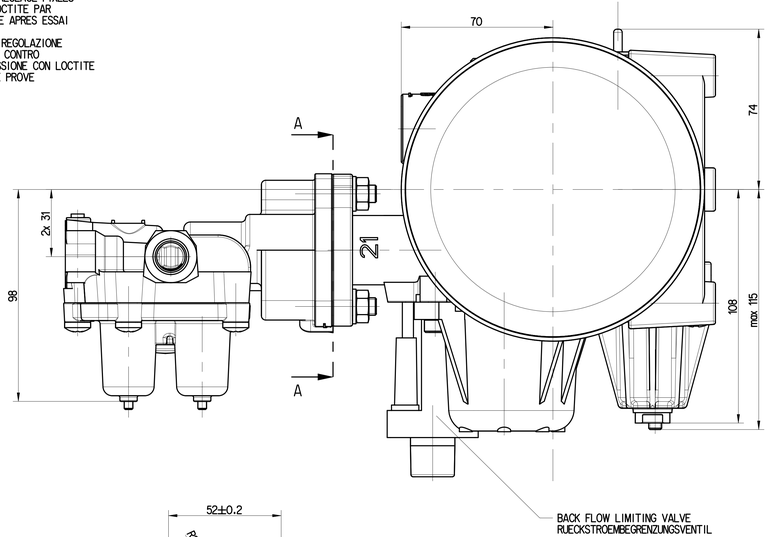

BACK FLOW LIMITING VALVE
RUECKSTROEMBEGRENZUNGSVENTIL

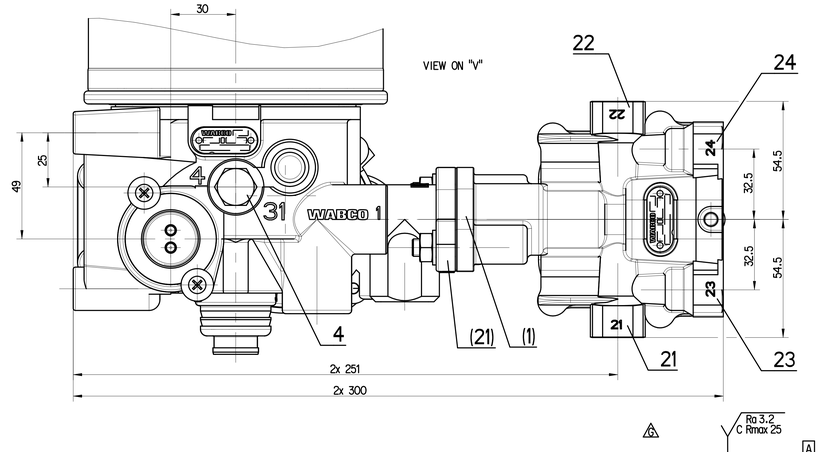

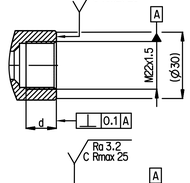

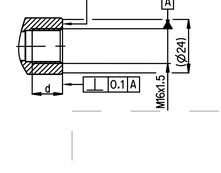

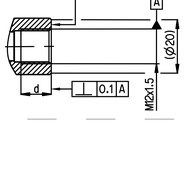

THERMAL RANGE OF CONTINUOUS APPLICATION: TERMISCHER DAUERANWENDUNGSBERREICH: PLAGE DE TEMPERATURE EN UTILISATION CONTINUE: COMPO DI APPICAZIONE CONTINUA:	-40°C ... +65°C	HEATING HEIZUNG CHAUFFAGE RISCALDAMENTO	
RESISTANCE TO HEAT: WAERMEBESTAENDIGKEIT: RESISTANCE A LA CHALEUR: RESISTANZA AL CALORE:	+80°C MAX	HEATING CUT-IN TEMPERATURE: HEIZUNG EINSCHALT-TEMPERATUR: CHAUFFAGE TEMPERATURE DE FERMETURE: RISCALDAMENTO TEMPERATURA DI CHIUSURA:	7±6°C
MEDIUM: MEDIUM: FLUIDE: FLUIDO:	COMPRESSED AIR DRUCKLUFT AIR COMPRIME ARIA COMPRESSA	HEATING CUT-OFF TEMPERATURE: HEIZUNG AUSSCHALT-TEMPERATUR: CHAUFFAGE TEMPERATURE DE MISE: RISCALDEMENTO TEMPERATURA DI APERTURA:	29.5 ±3.0°C
WORKING PRESSURE: BETRIEBSDRUCK: PRESSION DE SERVICE: PRESSIONE D' ESERCIZIO:	Pe MAX=13 bar	BATTERY VOLTAGE: BATTERIESPANNUNG: TENSION DE BATTERIE: TENSIONE DI BATTERIA:	24.0 +4.8/-2.4 V DC
MAX. PREMISSIBLE FREQUENCY: MAX. ZULAESSIGE FREQUENZ: MAX. ADMISSIBLE FREQUENZE: MAX. AMMISIBLE FREQUENZA:	50 Hz	NOMINAL POWER: NENNLEISTUNG: PULSSBANCE NOMINAL: POTENZA NOMINALE:	100 W
MAX. PREMISSIBLE ACCELERATION: MAX. ZULAESSIGE BESCHLINIGUNG: ACCELERATION MAX. ADMISSIBLE: ACCLERAZIONE MAX. AMMESA:	10 x g	POWER WITH 24V DC: LEISTUNG BEI 24V DC: PUISSANCE AVEC 24V DC POTENZA CON 24V DC	95 0/-5 W

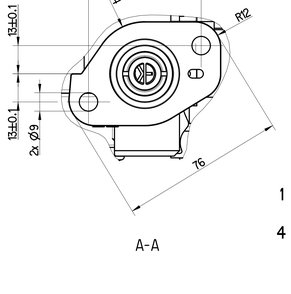

A-A

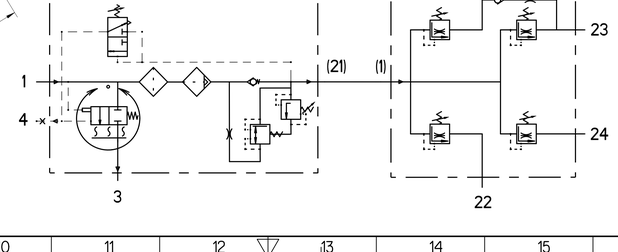

FLOW RATE = 16-35 l/min
AT P_{23}=8, P_{21}=0 bar
WHEN P_{21} DROPS TO ZERO
RETAINED P_{23}=1 bar max

DURCHFLUSSMENGE = 16-35 l/min
BEI P_{23}=8, P_{21}=0 bar
WENN P_{21} AUF NULL ABFAFELLT
GESICHERTER DRUCK P_{23}=1 bar max

DEBIT = 16-35 l/min
SOUS P_{23}=8, P_{21}=0 bar
SI P_{21} TOMBE A ZERO
LA PRESSION MAINTENUE A P_{23}=1 bar max

PORTATA = 16-35 l/min
PER P_{23}=8, P_{21}=0 bar
SE P_{21} CALC A ZERO
LA PRESSIONE MANTENUTA A P_{23}=1 bar max

General Specifications: ISO 8015, JED-334-1, Size ISO 14405 LP		Copyright ZF®	
Further Technical Data: Product Specification		Date / Signature	
Doc. Code: 035	Sheet 1 To 2	Drawn: 2024-12-19 Zhang	AIR PROCESSING UNIT
General Tolerances JED-261		Checked: 2025-02-14 Rabak	
Range of nominal dimensions in mm		207 x 300 x 333	
Class 1) ≤ 50 / > 50 ≤ 180 / > 180 ≤ 400 / > 400		Dimensions in mm	
Fine ±0.5 ±1 ±1.5 ±2		Mass 5.5 kg / Scale 1:1	Material No. 932 500 035 0
Medium X ±1 ±2 ±3 ±4	±3°	Size A 0 / CAD System CREO	Date of first issue: 2006-07-18
Coarse ±2 ±3.5 ±5 ±6.5		SAP-TG 518773 / Revision 2 x G / Techn. Resp. 5110	Doc.-Code 035 / Language ML / Sheet 1/1
Tapped Holes acc. JED-152, JED-388			Replacement for
1) Tolerance Class Applied, Crosscharacted			

Tale documento ha proprietà da ZF Friedrichshafen AG. Non è consentito la riproduzione o la divulgazione a terzi senza ZF Friedrichshafen AG. Questo documento contiene informazioni proprietarie. Non è consentito la riproduzione o la divulgazione a terzi senza ZF Friedrichshafen AG. Questo documento contiene informazioni proprietarie. Non è consentito la riproduzione o la divulgazione a terzi senza ZF Friedrichshafen AG.