EXTERNAL SURFACE AEUSSERE OBERFLAECHE SURFACE EXTERIEURE SUPERFICIE ESTERNA	
I	JED-259
II	JED-256-1
III	JED-471 SILVER / SILBER
IV	PLASTIC/KUNSTSTOFF
V	JED-570-656
VI	JED-260

WABCO AIR PROCESSING UNIT	WABCO AIR DRYER	BACK FLOW LIMITING VALVE DELTA-P (bar)	COMBINED UNLOADER		SAFETY PRESSURE OF THE PURGE VALVE AT V_N = 100 dm^3
			CUT OUT PRESSURE Pe = (bar)	OPERATING RANGE dP = (bar)	
932 500 122 0	432 415 074 0	(0.40x dP) ±0.05	10.5±0.2	$0.7\ ^{+0.6}_{0}$	$13\ ^{+4}_{0}$ bar

PORTS ORIFICES ANSHLUESSE ATTACCHI		21	22	23	24
OPENING PRESSURE DYNAMIC OEFFNUNGSDRUCK DYNAMISCH PRESSION DE OUVERTURE DYNAM PRESSIONE DI APERTURA DINAM	BAR	$7.8\ ^{+0}_{-0.3}$	$7.8\ ^{+0}_{-0.3}$	$8.5\ ^{+0}_{-0.3}$	$8.2\ ^{+0}_{-0.3}$
CLOSING PRESSURE DYNAMIC SCHLIESSDRUCK DYNAMISCH PRESSION DE FERMETURE DYNAM PRESSIONE DI CHIUSURA DINAM	BAR	> 6.5			
CLOSING PRESSURE STATIC AT FAILURE OF CIRCUIT.... SCHLIESSDRUCK STATISCH BEI AUSFALLVON KREIS... PRESSION DE FERMETURE STATIQUE EN CAS DE DEFAILLANCE DU CIRCUIT.... PRESSIONE DI CHIUSURA STATICA IN CASO DI DIFETTO DEL CIRCUITO...	BAR	0	> 6.0	#	> 6.0
		> 6.0	0	> 6.0	> 6.0
		> 6.0	> 6.0	0	> 6.0
		> 6.0	> 6.0	> 6.0	0

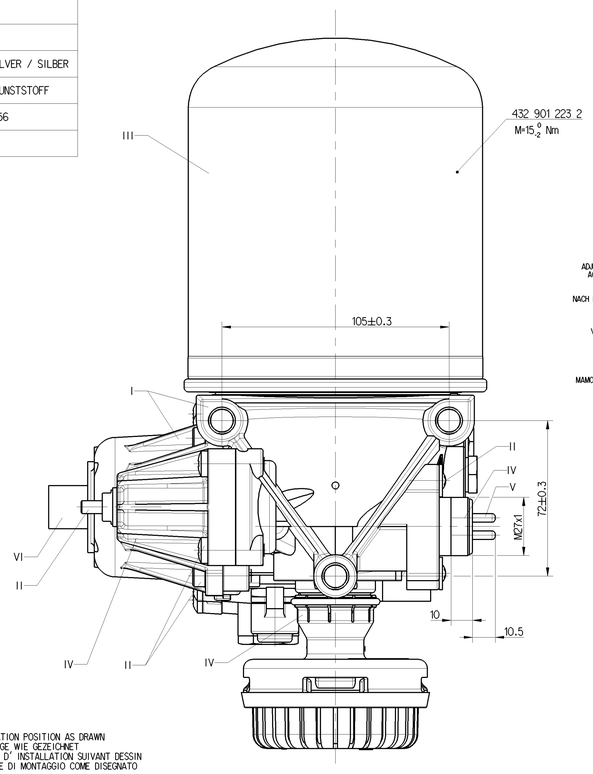

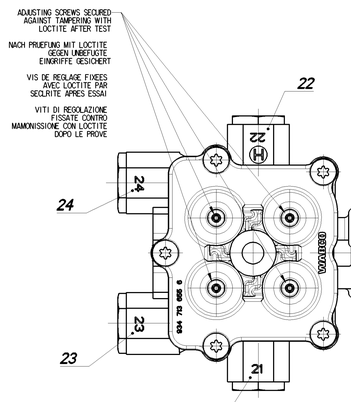

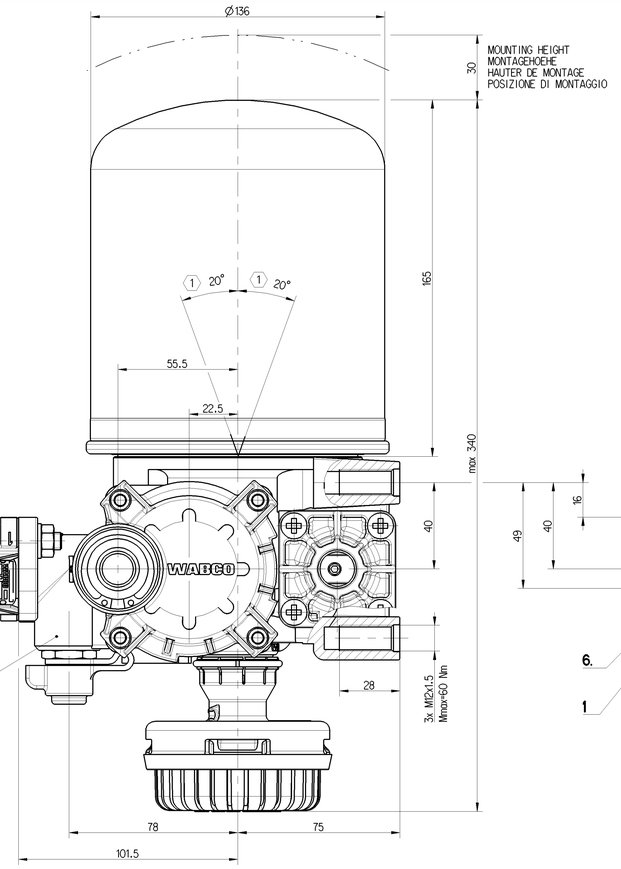

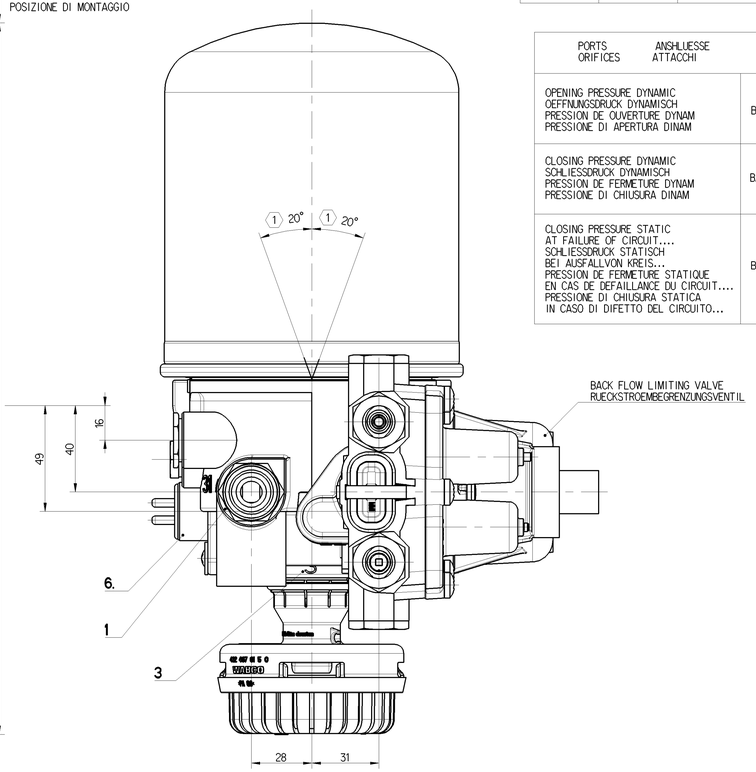

(1) INSTALLATION POSITION AS DRAWN
EINBAULAGE WIE GEZEICHNET
POSITION D' INSTALLATION SUIVANT DESSIN
POSIZIONE DI MONTAGGIO COME DISEGNATO

TORQUES FOR CONNECTIONS:
ANZUNGSMOMENT FUER EINSCHRAUBSTUTZEN:
COUPLE DE SARRAGE DES RACCORDS:
COPPIA DI SERRAGGIO DEI RACCORDI:

M12x1.5: Mmax = 21 Nm
M16x1.5: Mmax = 35 Nm
M22x1.5: Mmax = 53 Nm

THERMAL RANGE OF CONTINUOUS APPLICATION: THERMISCHER DAUERANWENDUNGSBEREICH: PLAGE DE TEMPERATURE EN UTILISATION CONTINUE: COMPO DI APPICAZIONE CONTINUA:	-40°C... +65°C	HEATING HEIZUNG CHAUFFAGE RISCALDAMENTO
RESISTANCE TO HEAT: WAERMEBESTAENDIGKEIT: RESISTANCE A LA CHALEUR: RESISTANZA AL CALORE:	+80°C max.	HEATING CUT-IN TEMPERATURE: HEIZUNG EINSCHALT-TEMPERATUR CHAUFFAGE TEMPERATURE DE FERMETURE: RISCALDAMENTO TEMPERATURA DI CHIUSURA: 7 ±6°C
MEDIUM: MEDIUM: FLUIDE: FLUIDO:	COMPRESSED AIR DRUCKLUFT AIR COMPRIME ARIA COMPRESSA	HEATING CUT-OFF TEMPERATURE: HEIZUNG AUSSCHALT-TEMPERATUR: CHAUFFAGE TEMPERATURE DE MISE: RISCALDEMENTO TEMPERATURA DI APERTURA: 29.5 ±3.0°C
WORKING PRESSURE: BETRIEBSDRUCK: PRESSION DE SERVICE: PRESSIONE D' ESERCIZIO:	Pe max. = 13 bar	POWER WITHOUT CURRENT: LEISTUNG STROMLOS: PUISSANCE SANS COURANT: POTENZA SENZA CORRENTE: 100 W
MAX. PERMISSIBLE FREQUENC MAX. ZULAESSIGE FREQUENZ MAX. ADMISSIBLE FREQUENZE MAX. AMMISIBLE FREQUENZA	50 Hz	POWER WITH 24V DC: LEISTUNG BEI 24V DC: PUISSANCE AVEC 24V DC: POTENZA CON 24V DC: 95 +0/-5W
MAX. PERMISSIBLE ACCERELATION MAX. ZULAESSIGE BESCHLUNIGUNG ACCELERATION MAX. ADMISSIBLE ACCELERAZIONE MAX. AMMESA	±10xg	BATTERY VOLTAGE: BATTERIESPANNUNG: TENSION DE BATTERIE: TENSIONE DI BATTERIA: 24.0 +4.8/-2.4 V DC

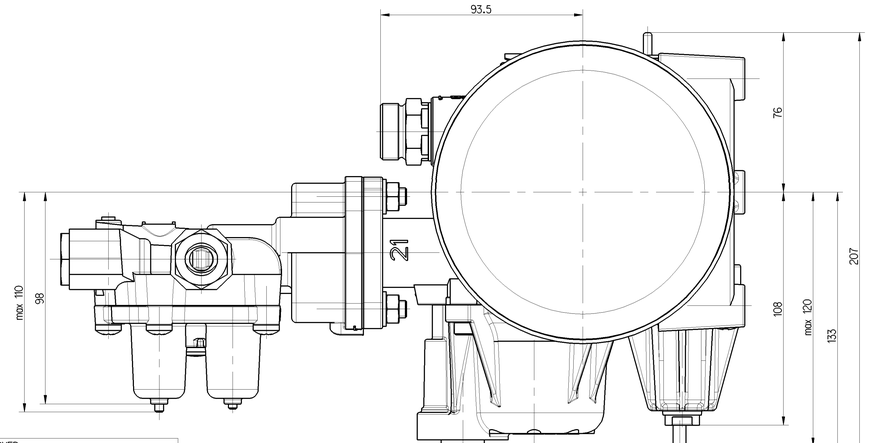

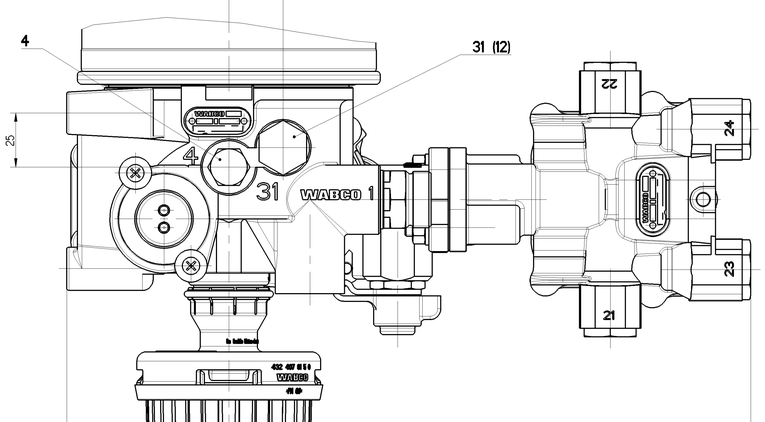

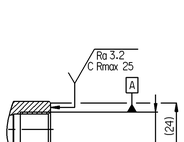

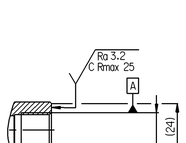

QUAD CIRCUIT PROTECTION VALVE VIERKREIS-SCHUTZVENTIL VALVE DE PROTECTION (LA 4 CIRCUIT) VALVOA DI PROTEZTIONE (LA 4 CIRC.)			934 714 163 0
PORT ANSCHLUSS ORIFICE ORIFIZIO	FUNCTION FUNCTION FONCTION FUNZIONE	THREAD GEWINDE FILETAGE FILETTAURA	CIRCUIT KREIS CIRCUIT CIRCUITO
(1)	FROM AIR DRYER VOM LUFTTROCKNER DE DESSICCATEUR D'AIR ESSICATORE D'ARIA	-	
21	SERVICE BRAKE BETRIEBSBREMSE FREINAGE FRENATURA	M22x1.5 TO SUIT VOSS PLUG IN SYSTEM 230	1
22	SERVICE BRAKE BETRIEBSBREMSE FREINAGE FRENATURA	M22x1.5 TO SUIT VOSS PLUG IN SYSTEM 230	2
23	TRAILER BRAKING SYSTEM ANHAENGER BREMSANLAGE SYSTEME DE FREINAGE DE LA REMORQUE FRENATURA DEL RIMORCHIO	M22x1.5 TO SUIT VOSS PLUG IN SYSTEM 230	3
24	AUXILIARES NEBENVERBRAUCHER AUXILIAIRES	M22x1.5 TO SUIT VOSS PLUG IN SYSTEM 230	4

AIR DRYER LUFTTROCKNER DESSICATEUR D'AIR ESSICATORE D'ARIA			432 415 074 0
PORT ANSCHLUSS ORIFICE ORIFIZIO	FUNCTION FUNCTION FONCTION FUNZIONE		THREAD GEWINDE FILETAGE FILETTAURA
1	FROM THE COMPRESSOR VOM KOMPRESSOR PROVENANT DU COMPRESSEUR PROVENIENTE DEL COMPRESSORE		OUTER TREAD M26x1.5
(21)	TO PROTECTION VALVE ZUM SCHUTZVENTIL AU VALVE DE PROTECTION A VALVOA DI PROTEZIONE		-
22	TIRE INFLATION DEVICE - CLOSED REIFENFUELLANSCHLUSS - VERSCHLOSSEN PRISE POUR GONFLAGE PNEU - FERM PRESA PER GONFIAGGIO PNEUM - CHIUSO		M16x1.5 JED-388
3	EXHAUST FOR COMPRESSED AIR ENTLUEFTUNG FUER DRUCKLUFT ECHAPPEMENT POUR AIR COMPRIME SCARICO PER ARIA COMPRESSA		SILENCER 432 407 015 0
31 (12)	EXTERNAL FILLING FREMDBEFUELLUNG ALIMENTATION DE L'EXTERIEUR ALIMENTAZIONE SEPARATA	CLOSED	M16x1.5 JED-152 d=25.1
4	TO THE COMMPRESSOR ZUM KOMPRESSOR AU COMPRESSEUR CLOSED AL COMPRESSORE	CLOSED	M12x1.5 JED-152 d=12
6.	HEATING HEIZUNG CHAUFFAGE RISCALDAMENTO		M27x1.0

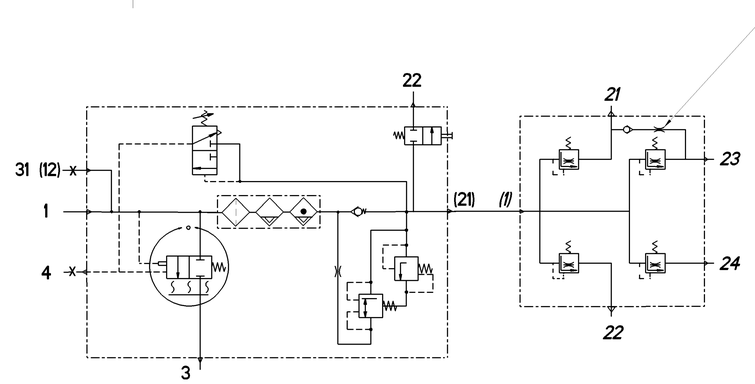

FLOW RATE = 16-35 l/min
AT P_{23}=8, P_{21}=0 bar
WHEN P_{21} DROPS TO ZERO
RETAINED P_{23}=1 bar max

DURCHFLUSSMENGE = 16-35 l/min
BEI P_{23}=8, P_{21}=0 bar
WENN P_{21} AUF NULL ABFAFELLT
GESICHERTER DRUCK P_{23}=1 bar max

DEBIT = 16-35 l/min
SOUS P_{23}=8, P_{21}=0 bar
SI P_{21} TOMBE A ZERO
LA PRESSION MAINTENUE A P_{23}=1 bar max

PORTATA = 16-35 l/min
PER P_{23}=8, P_{21}=0 bar
SE P_{21} CALC A ZERO
LA PRESSIONE MANTENUTA A P_{23}=1 bar max

General Specification: JED-334-1 , Size ISO 14405 LP
Further Technical Data: Product Specification
Doc. Code: 035 Sheet: 1 To 2
General Tolerances JED-261
Range of Nominal Dimensions (in mm)

Class 11		≤ 50	> 50 ≤ 180	> 180 ≤ 400	> 400	
Fine		0.5	1.0	1.5	2.0	
Medium	X	1.0	2.0	3.0	4.0	±3°
Coarse		2.0	3.5	5.0	6.5	

Tapped Holes acc. JED-152 / JED-388
11 Tolerance Class Applied Crosshatched

Copyright WABCO®

Date	Signature	
2015-07-16	Kurzynski	Drawn
2015-07-20	Chamol	Checked
		Copy LITER

WABCO

AIR PROCESSING UNIT
DRUCKLUFTAUFBEREITUNG
UNITE COMPACTE
UNITA COMPATTA

Mass	Scale	Material No.	Date of first issue: 2015-07-20
5.73 kg	1:1	932 500 122 0	Doc.-Code 005 / Language ML / Sheet 1/1
Size A 0	CAD System CREO	ECN No. - / Revision - / Techn. Repl. 5110	Replacement for

100mm