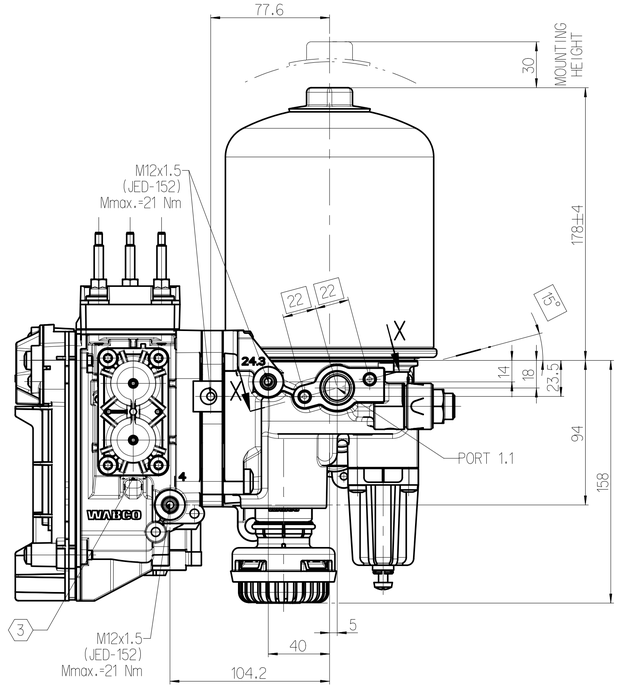

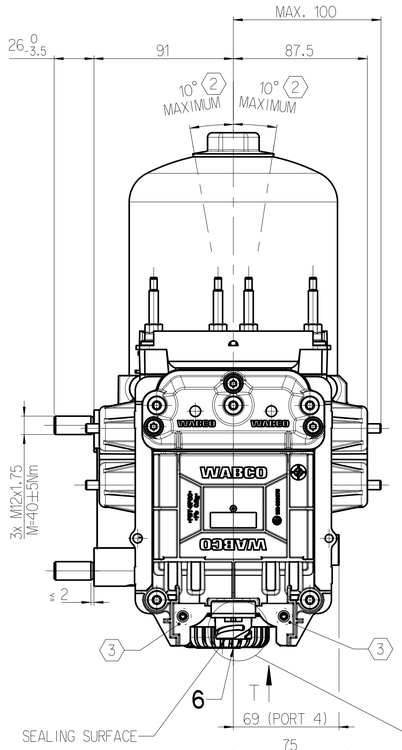

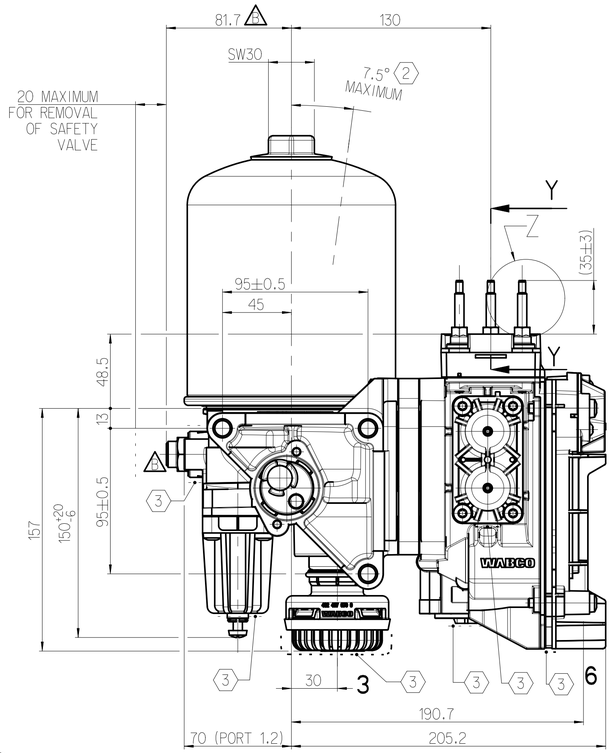

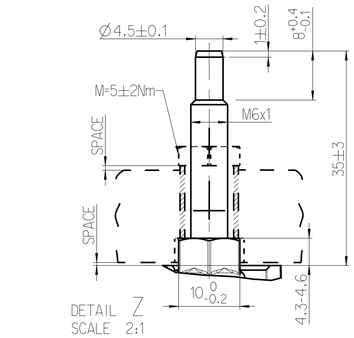

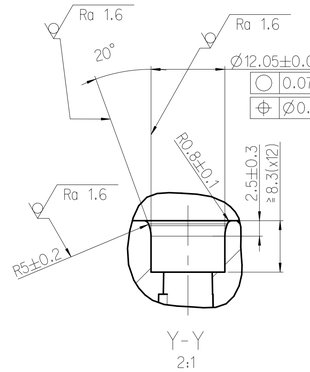

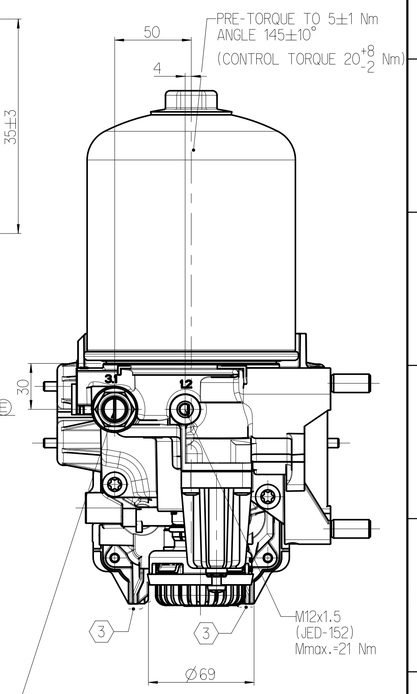

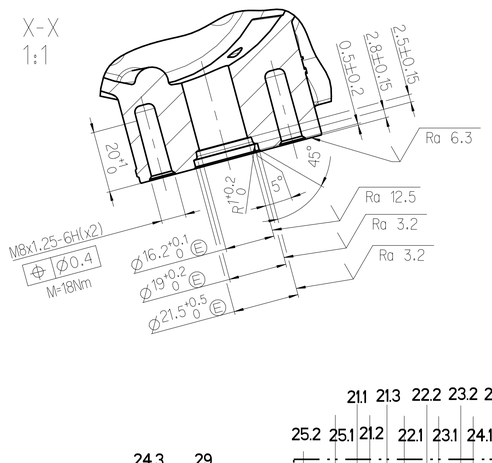

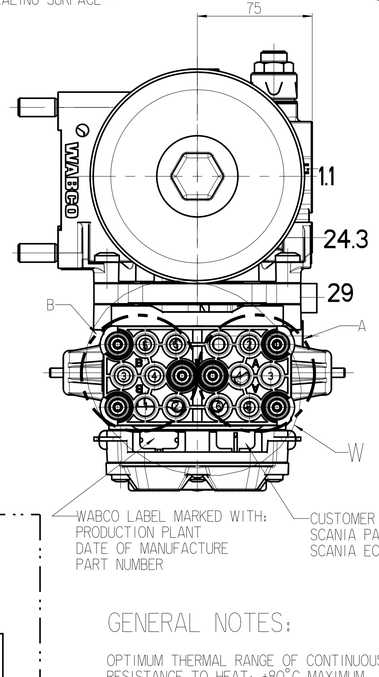

WABCO LABEL MARKED WITH:
PRODUCTION PLANT
DATE OF MANUFACTURE
PART NUMBER

CUSTOMER LABEL
SCANIA PART NUMBER 2308778
SCANIA ECU HW NUMBER 2153854

WABCO: 894 110 772 4	
(DIN72585-A1-2.1-1-Sn/k2 CONNECTOR)	
PIN NUMBER	FUNCTION
6.1	Vcc, BATTERY (24V)
6.2	GROUND
6.3	Vcc, IGNITION (24V)
6.4	CAN HIGH
6.5	CAN LOW
6.6	N.C.
6.7	N.C.

VIEW OF T

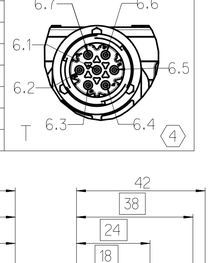

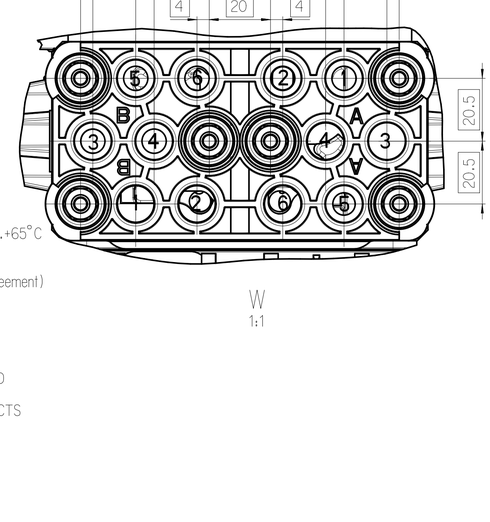

W
1:1

AIRDRYER		
PORT	FUNCTION	OPENING PRESSURE bar
1.1	FROM COMPRESSOR	-
1.2	EXTERNAL FILLING	-
24.3	AUXILIARIES	-
29	REGENERATION TANK	-
3	EXHAUST	-
3.1	EXHAUST FOR SAFETY VALVE	14.5 +0/-1.5

MULTI CIRCUIT PROTECTION VALVE						
PORT	FUNCTION			DYNAMIC OPENING bar (+0/-0.3)	STATIC CLOSING bar (>=)	PRESSURE LIMITING bar
		REF.	CIRCUIT			
25.1	AIR SUSPENSION	B5	5	8.5	-	-
21.1	SERVICE BRAKE	B3	1	7.5	4.5	-
21.2	SERVICE BRAKE	B1	1	7.5	4.5	-
25.2	AIR SUSPENSION	B6	5	8.5	-	-
23.1	PARKING BRAKE/ TRAILER	B4	3	6.5±0.5 AND 21+22>=7,2bar	4.5 +1.5 -0.5	8.4±0.1
21.3	SERVICE BRAKE	B2	1	7.5	4.5	-
24.1	AUXILIARIES	A2	4	7.5	4.5	8.4±0.1
22.1	SERVICE BRAKE	A4	2	7.5	4.5	-
22.2	SERVICE BRAKE	A6	2	7.5	4.5	-
24.2	AUXILIARIES	A1	4	7.5	4.5	8.4±0.1
NC	-	A3	-	-	-	-
23.2	PARKING BRAKE/ TRAILER	A5	3	6.5±0.5 AND 21+22>=7,2bar	4.5 +1.5 -0.5	8.4±0.1
4	COMPRESSOR CONTROL	-	-	-		8.4±0.1

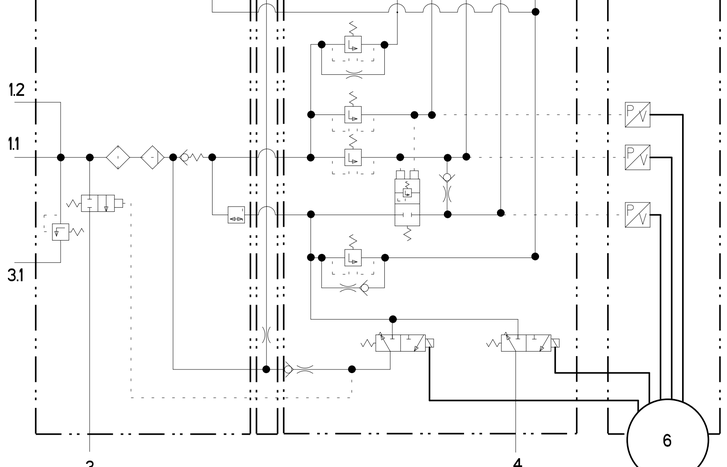

GENERAL NOTES:

OPTIMUM THERMAL RANGE OF CONTINUOUS APPLICATION: -40°C....+65°C
RESISTANCE TO HEAT: +80°C MAXIMUM

(2) INSTALLATION POSITION: AS DRAWN (deviation only with WABCO agreement)

WORKING PRESSURE: 12.5bar MAXIMUM

MEDIUM: COMPRESSED AIR

(3) BREATHING/EXHAUSTING AREAS MARKED: MUST NOT BE OBSTRUCTED

(4) PLEASE DO NOT TOUCH THE MALE MULTIPOINT CONNECTOR CONTACTS

BOOTLOADER-SW (VERSION 1.0.0): 246 260 004 2

APPLICATION-SW (VERSION 9.0.0): 246 260 012 2

FURTHER NOTES SEE PRODUCT SPECIFICATION DOC. CODE 435

TO KEEP TRACEABLITY OF PARTS SEE DOC. CODE 987

Tous Communication ou reproduction de ce document, toute exploitation ou communication de son contenu sont interdites, sauf autorisation écrite. Tous droits de propriété industrielle réservés, notamment en matière de brevets et de modèles.

Non è permesso consegnare o terzi o riprodurre questo documento, né utilizzare il contenuto o renderlo comunque noto a terzi senza autorizzazione scritta. Ogni diritto di proprietà industriale è riservato, in particolare quello di brevetto o di registrazione di modelli.

Copying of this document and giving it to others and the use or communication of the contents thereof, are forbidden without express authority. Offenders are liable to the payment of damages. All rights are reserved in the event of the grant of patent or registration of a utility model or design. This document is the subject of copyright.

Weitergabe sowie Vervielfältigung dieser Unterlage, Verwertung und Mitteilung ihres Inhalts nicht gestattet, soweit nicht ausdrücklich zugesichert. Zuwiderhandlungen verpflichten zu Schadensersatz. Alle Rechte für den Fall der Patent-Erteilung oder Gebrauchsmuster-Eintragung vorbehalten.

General Specification: ISO 8015, JED-334-1, Size ISO 14405 LP					
Further Technical Data: Product Specification					
Doc. Code: O35		Sheet: 1 To 5			
General Tolerances JED-261					
Range of nominal dimensions in mm					
Class 1)	≤ 50	> 50 ≤ 180	> 180 ≤ 400	> 400	∢
Fine	±0.5	±1	±1.5	±2	±3°
Medium X	±1	±2	±3	±4	
Coarse	±2	±3.5	±5	±6.5	
Tapped Holes acc. -					
1) Tolerance Class Applied Crossmarked					

Copyright ZF®

Date	Signature
Drawn	
2025-11-27	Kurzynski
Checked	
-	-
287 x 213 x 336	
Dimensions in mm	

E-APU

Mass	Scale	Material No.	Date of first issue: 2014-04-03		
7.923 kg	1:1 (1:1;2:1)	932 510 011 0	Doc.Code 005	Language EN	Sheet 1/1
Size A 1	CAD System CREO	ECN-No. 514732	Revision 2 x B	Techn. Resp. 5112	Replacement for 932 510 050 0

100mm

Dwg.: 932510011_005 D.1 Work 2 In Work