| | |
|---|---|
| SAFETY CHARACTERISTICS | 0 |
| SIGNIFICANT CHARACTERISTICS | 1 |
| CUSTOMER INTERFACE | 32 |

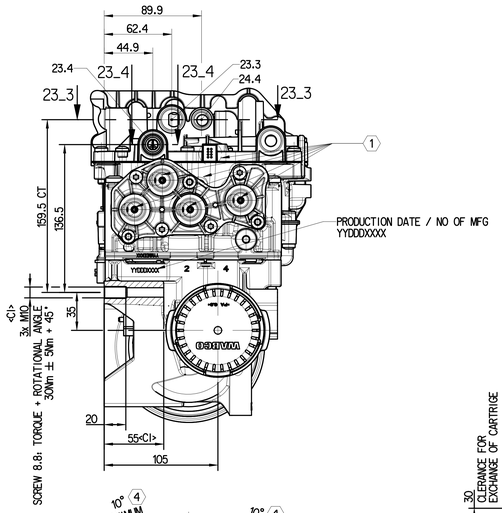


WABCO-NO.: 8580008544 (Doc.Code 007)
HDSCS, 8-POS 1.5mm TAB, CODE A
SUITABLE COUNTERPART:
AMP MCP 1.5k, TYCO ELECTRONICS NO.: 1418479

| VIEW OF ELECTR. CONNECTOR | PIN NUMBER | FUNCTION | COATING |
|---|---|---|---|
| 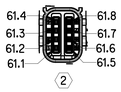 | 61.1 | CAN H | Au |
| | 61.2 | CAN L | Au |
| | 61.3 | CAN SHIELD | Au |
| | 61.4 | IGNITION (24V) K 15 | Au |
| | 61.5 | CARTRIDGE HS | Sn |
| | 61.6 | CARTRIDGE LS | Sn |
| | 61.7 | BATTERY (24V) K 30 | Sn |
| | 61.8 | GND | Sn |

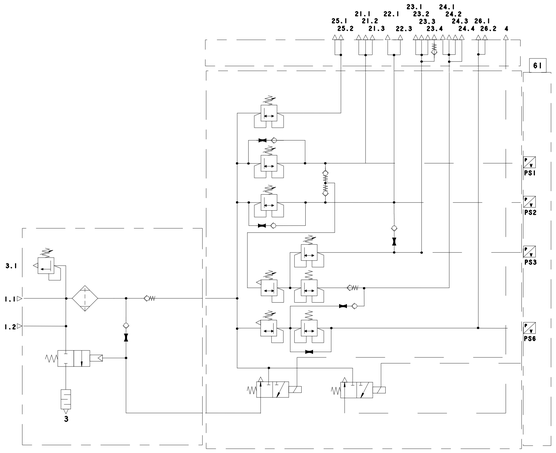

| PORT | FUNCTION | CIRCUIT | CONNECTION | (SUITABLE FOR) TYPE OF RAUFOSS ABC PUSH-IN CONNECTOR (NOT INCLUDED) | DYNAMIC OPENING bar (+0.3/-0) | STATIC CLOSING bar ( >= ) | PRESSURE LIMITING bar (+0.2/-0.3) |
|---|---|---|---|---|---|---|---|
| 1.1 | SUPPLY | - | FROM COMPRESSOR | | - | - | - |
| 1.2 | EXTERNAL FILLING | - | TO LH SIDE | KARTRIDGE SMALL | - | - | - |
| 21.1 | SERVICE BRAKE | 1 | TO MEASUREMENT | THREADLESS SMALL | 7.8 | 4.5 | - |
| 21.2 | SERVICE BRAKE | 1 | TO THE REAR | THREADLESS REGULAR | 7.8 | 4.5 | - |
| 21.3 | SERVICE BRAKE | 1 | TO THE CAB | THREADLESS REGULAR | 7.8 | 4.5 | - |
| 22.1 | SERVICE BRAKE | 2 | TO MEASUREMENT | THREADLESS SMALL | 8.2 | 4.5 | - |
| 22.3 | SERVICE BRAKE | 2 | TO THE CAB | THREADLESS REGULAR | 8.2 | 4.5 | - |
| 23.1 | PARKING BRAKE/ TRAILER | 3 | TO MEASUREMENT | THREADLESS SMALL | 7.8 | 3.1 | 8.5 |
| 23.2 | PARKING BRAKE/ TRAILER | 3 | TO THE REAR | THREADLESS HEAVY DUTY | 7.8 | 3.1 | 8.5 |
| 23.3 | PARKING BRAKE/ TRAILER | 3 | TO THE RH SIDE | KARTRIDGE REGULAR | 7.8 | 3.1 | 8.5 |
| 23.4 | PARKING BRAKE/ TRAILER | 3 | TO THE CAB TO THE REAR | KARTRIDGE REGULAR | 7.8 | 3.1 | 8.5 |
| 24.1 | AUXILIARY | 4 | TO MEASUREMENT | THREADLESS SMALL | >=7.9 | 4.5 | 8.5 |
| 24.2 | AUXILIARY | 4 | TO THE REAR | THREADLESS REGULAR | >=7.9 | 4.5 | 8.5 |
| 24.3 | AUXILIARY | 4 | TO THE CAB | THREADLESS REGULAR | >=7.9 | 4.5 | 8.5 |
| 24.4 | AUXILIARY | 4 | TO THE RH SIDE | KARTRIDGE SMALL | >=7.9 | 4.5 | 8.5 |
| 25.1 | AIR SUSPENSION | 5 | TO MEASUREMENT | THREADLESS SMALL | 8.3 | 4.5 | - |
| 25.2 | AIR SUSPENSION | 5 | TO THE REAR | THREADLESS REGULAR | 8.3 | 4.5 | - |
| 26.1 | POWER TRAIN | 6 | TO MEASUREMENT | THREADLESS SMALL | >=7.9 | 4.5 | 8.5 |
| 26.2 | POWER TRAIN | 6 | TO THE REAR | THREADLESS REGULAR | >=7.9 | 4.5 | 8.5 |
| 3 | EXHAUST | - | | | - | - | - |
| 3.1 | EXHAUST FOR SAFETY VALVE | - | | | 14.5 +0/-1.5 | - | - |
| 4 | COMPRESSOR CONTROL | - | TO THE REAR | THREADLESS SMALL | - | - | - |

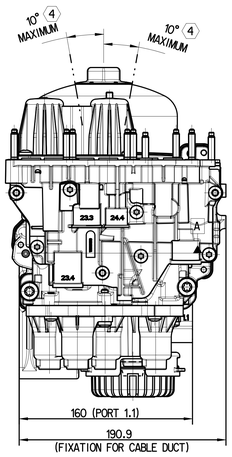


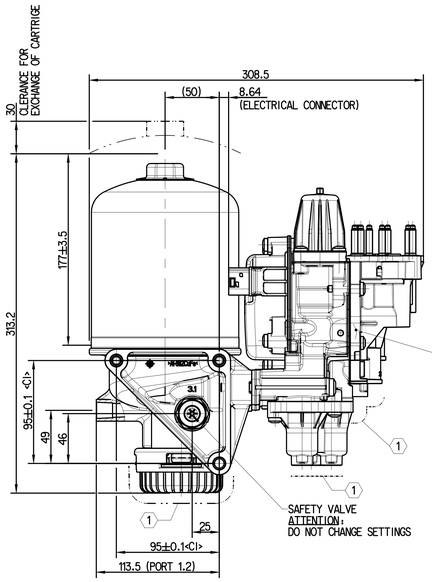


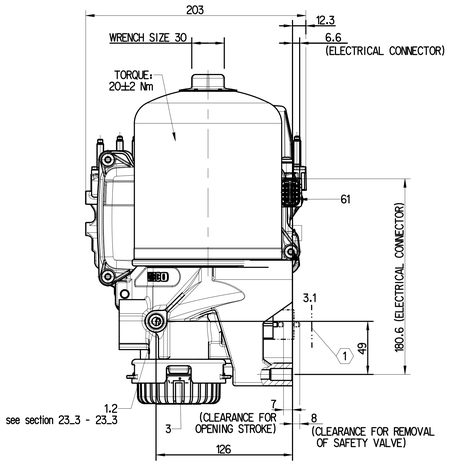


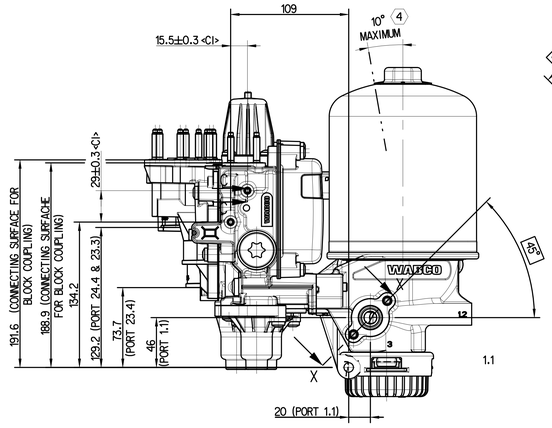


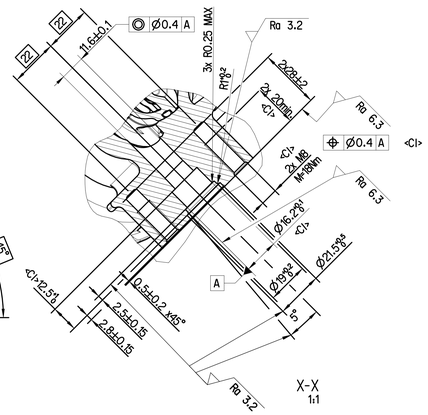


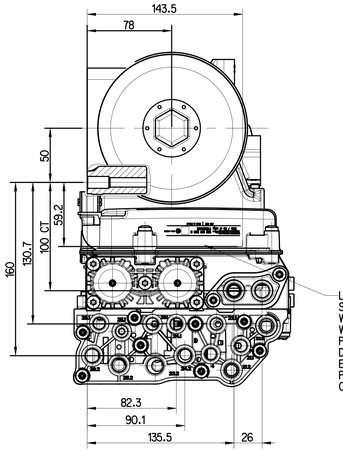


LASER MARKING(orientation as shown)FOR DETAILS
SEE LABELING INFORMATION DOC. 922:
WABCO LOGO
WABCO PART NUMBER
PRODUCTION DATE / NO OF MFG YYDDDXXXX
DATA MATRIX CODE
E1 MARK<2>
PRODUCTION RESPONSIBILITY INDICATION (PRI)
COUNTRY OF ORIGIN

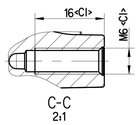


FIXATION FOR CABLE DUCT (2x)

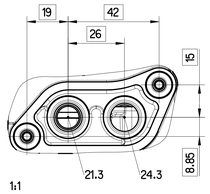


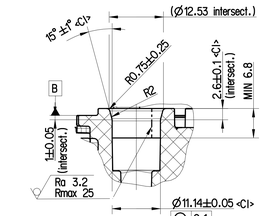


SWIVEL PORT FOR SMALL
TYPE OF RAUFOSS CONNECTOR
ABC THREADLESS PUSH-IN
COUPLING: 902 06 004
(7x)

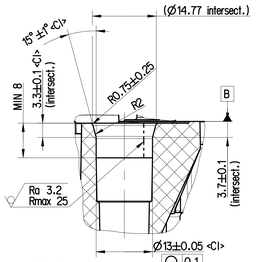


SWIVEL PORT FOR REGULAR
TYPE OF RAUFOSS CONNECTOR
ABC THREADLESS PUSH-IN
COUPLING: 902 12 005
(7x)

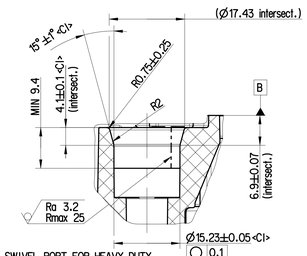


SWIVEL PORT FOR HEAVY DUTY
TYPE OF RAUFOSS CONNECTOR
ABC THREADLESS PUSH-IN
COUPLING: 902 16 006
(1x)

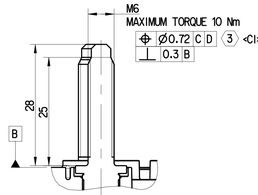


FIXATION STUD FOR
BLOCK COUPLINGS
(10x)

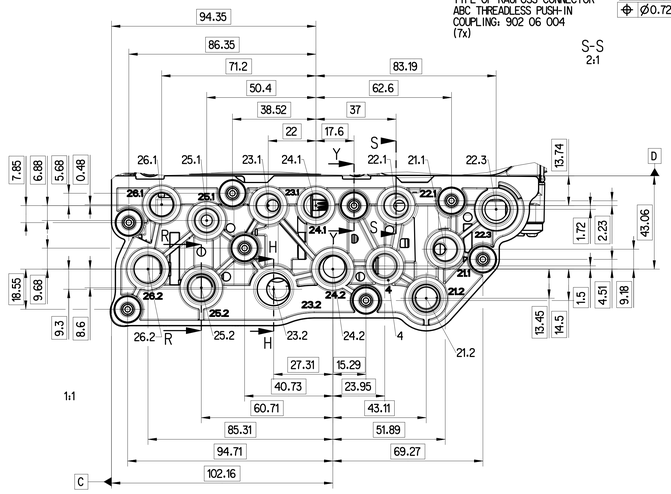


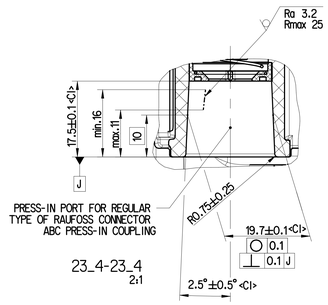


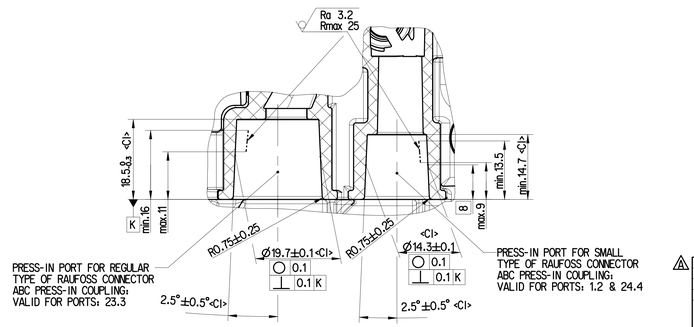


GENERAL NOTES:

CONTINUOUS OPERATING TEMPERATURE: -40°C....+90°C
TEMPERATURE RANGE WITH FULL DRYING PERFORMANCE: -40°C....+65°C
SHORT TERM MAXIMUM INLET TEMPERATURE: 110°C FOR 5 MIN.

MEDIUM: COMPRESSED AIR

WORKING PRESSURE: $p_e$max.=13 bar

1. BREATHING/EXHAUSTING AREAS MARKED: MUST NOT BE OBSTRUCTED
2. PLEASE DO NOT TOUCH THE MALE MULTIPOINT CONNECTOR CONTACTS
3. DATUM B = CONNECTING SURFACE BETWEEN BLOCK COUPLING AND E-APU
   DATUM C and D = CORRESPONDING REFERENCE
4. INSTALLATION POSITION: AS DRAWN (deviation only with ZF agreement)

CLEANLINESS CLASS: JED-593 CCC=A (KOO), A=2027722.4 mm²

BOOTLOADER-SW (VERSION 1.3.0): 246 260 024 2
APPLICATION-SW (VERSION 06.1.0): 246 260 205 2

| | | | |
|---|---|---|---|
| Copyright ZF* | | | |
| Date | Drawn | Signature | |
| 2025-03-28 | Pakula | | E-APU |
| Checked | | | |
| 2025-04-07 | Kotkowski | | |
| 204 x 309 x 353 | | | |
| Material No. | | Date of first issue: | 2025-12-14 |
| 932 510 260 0 | | Doc.Code: 005 | Language: EN |
| | | Sheet: 1/1 | |
| Mass: 8.127 | Scale: 1:2 (1:1:2:1) | | |
| Size: A 0 | CAD System: CREO | | |
| EDM No.: 519546 | Revision: 2 x A | Techn. Resp.: 5112_AM | Replacement for: - |

General Specification: ISO 8015, JED-334-1, Size ISO 14405 LP
Further Technical Data: Product Specification
Doc. Code: 0355 — Sheet: 1 To 15
General Tolerances JED-261

| Class | | Range of nominal dimensions in mm: ≤ 50 | > 50 ≤ 180 | > 180 ≤ 400 | > 400 | Angle |
|---|---|---|---|---|---|---|
| Fine | | ±0.5 | ±1 | ±1.5 | ±2 | |
| Medium | X | ±1 | ±2 | ±3 | ±4 | ±3° |
| Coarse | | ±2 | ±3.5 | ±5 | ±6.5 | |

Dimensions in mm
Tapped Holes acc. –
N: Tolerance Class Applied Crossmarked

Tale Comunicazione, la riproduzione di questo documento, l'uso esclusivo o comunicazione del suo contenuto non consentiti, salvo autorizzazione espressa. Le trasgressioni obbligano al risarcimento dei danni. Tutti i diritti sono riservati, nel caso di rilascio di brevetto, marchio o modello registrato.
Nous ne pouvons consentir à l'utilisation, à la reproduction ou à la communication de ce document ou de son contenu sans notre accord préalable. Tout manquement à cette règle constitue un délit civil et expose au versement de dommages et intérêts. Tous droits réservés, notamment en cas de délivrance de brevet, de marque ou de dessin et modèle.
Aquest document no es pot copiar ni donar a terceres persones sense el nostre consentiment. Les infractors estan obligats a indemnitzar els danys. Tots els drets reservats, en cas de concessió de patent, de marca o de model.
Este documento no puede ser copiado ni entregado a terceros sin nuestro consentimiento. Los infractores están obligados a indemnizar daños y perjuicios. Todos los derechos reservados, en caso de concesión de patente, de marca o de diseño.
Este documento não pode ser reproduzido nem entregue a terceiros sem o nosso consentimento. Os infratores estão obrigados a indemnizar danos. Todos os direitos reservados em caso de concessão de patente, de marca ou de desenho ou modelo.
Questo documento non può essere copiato né consegnato a terzi senza il nostro consenso. Gli infrattori sono tenuti al risarcimento dei danni. Tutti i diritti sono riservati, nel caso di rilascio di brevetto, marchio o modello.
Kopiowanie, udostępnianie osobom trzecim oraz wykorzystanie treści niniejszego dokumentu bez naszej zgody jest zabronione. Naruszyciele są zobowiązani do zapłaty odszkodowania. Wszelkie prawa zastrzeżone w przypadku uzyskania patentu lub rejestracji prawa ochronnego na wzór użytkowy lub wzór przemysłowy.