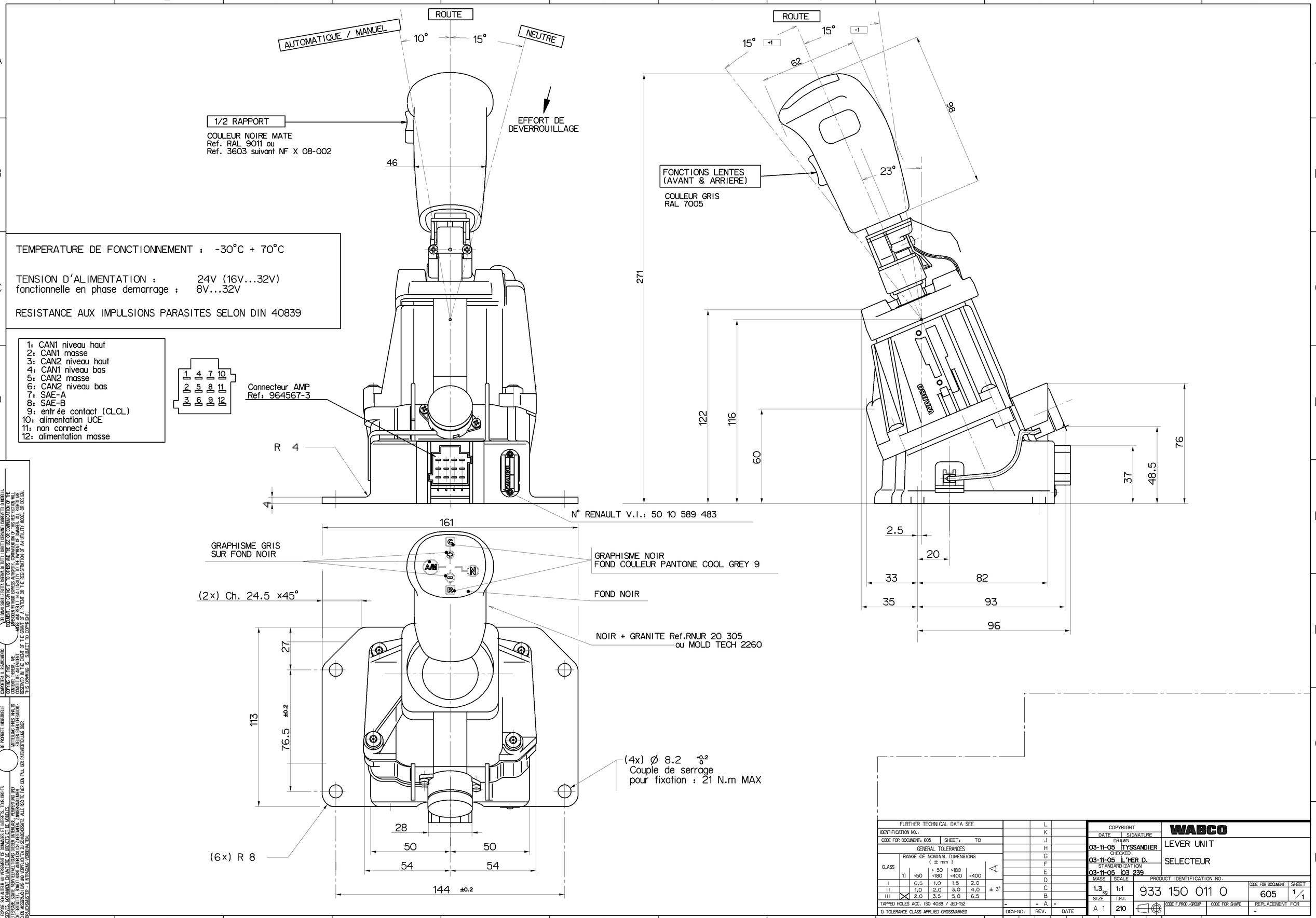

FURTHER TECHNICAL DATA SEE								
IDENTIFICATION NO.:								
CODE FOR DOCUMENT: 605	SHEET: TO							
GENERAL TOLERANCES								
CLASS	RANGE OF NOMINAL DIMENSIONS (± mm)							
	1)	<50	> 50 <180	>180 <400	>400	∢		
I		0,5	1,0	1,5	2,0			
II		1,0	2,0	3,0	4,0	± 3°		
III	☒	2,0	3,5	5,0	6,5			
TAPPED HOLES ACC. ISO 4039 / JED-152								
1) TOLERANCE CLASS APPLIED CROSSMARKED								

DCN-NO.	REV.	DATE
	L	
	K	
	J	
	H	
	G	
	F	
	E	
	D	
	C	
	B	
-	- A	-

100mm

COPYRIGHT
DATE | SIGNATURE
DRAWN 03-11-05 TYSSANDIER
CHECKED 03-11-05 L'HER D.
STANDARDIZATION 03-11-05 03 239

WABCO

LEVER UNIT

SELECTEUR

MASS	SCALE	PRODUCT IDENTIFICATION NO.	CODE FOR DOCUMENT	SHEET
1.3 kg	1:1	933 150 011 0	605	1/1
SIZE	T.R.I.	CODE F.PROD.-GROUP	CODE FOR SHAPE	REPLACEMENT FOR
A 1	210			-

EXPERT CODE | TYPE OF PRODUCT

86-01