I

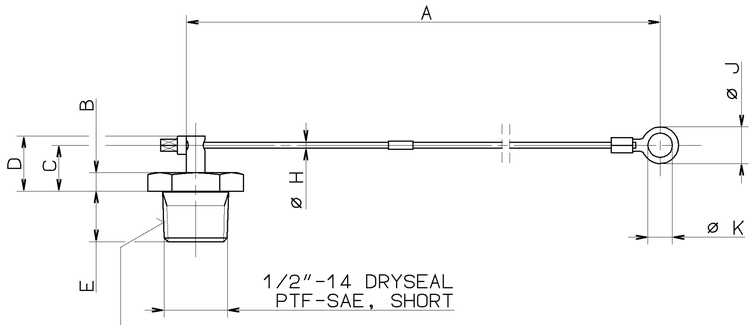

COATED WITH :
BESCHICHTED MIT : 852 003 401 4
ENDUIT DE : (JED-340.1)
SPALMATO DI :

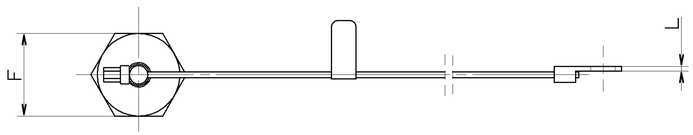

II Ⓑ

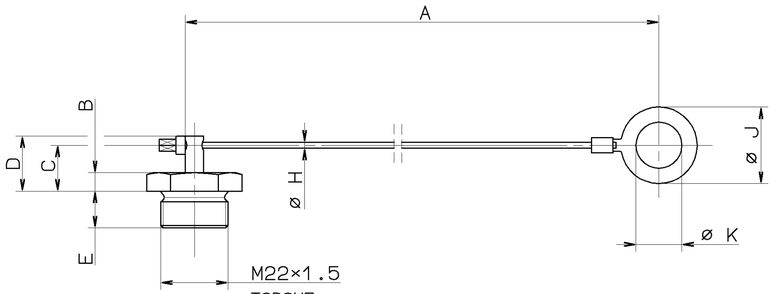

TORQUE :
ANZUGSMOMENT : ≤45Nm
COUPLE DE SERRAGE :
COPPIA DI SERRAGGIO:

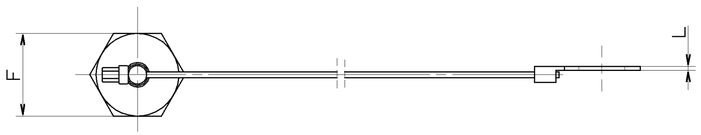

MAX. WORKING PRESSURE :
MAX. BETRIEBSDRUCK :
PRESSION D'UTILISATION MAXI :
PRESSIONE DI'ESERCIZIONE MAX.: p_e = 20 bar

THERMAL RANGE OF APPLICATION :
THERMISCHER ANWENDUNGSBEREICH:
GAMME D'APPLICATION THERMIQUE:
CAMPO DI APPLICAZIONE TERMICA: -40°C...+80°C

MEDIUM: AIR,WATER,MINERAL OIL
MEDIUM: LUFT,WASSER,MINERALOEL
FLUIDE: AIR,EAU,HUILE, MINERAL
FLUIDO. ARIA,AQUA,OLIO MINERALE

TENSILE FORCE TO EJECT WATER: 54N AT 7bar PRESSURE
ZUGKRAFT FUER WASSERAUSSTOSS: 54N BEI 7BAR DRUCK

	IDENTIFICATION BENENNUNG DENOMINATION DEMONINATIONE	CUSTOMERS NO. KUNDEN-NR. NO. CLIENT CLIENTE	DESIGN AUSFUEHRUNG EXECUTION ESECUZIONE	A (mm)	B (mm)	C (mm)	D (mm)	E (mm)	F (mm)	H (mm)	J (mm)	K (mm)	L (mm)	MASS GEWICHT MASSE MASSA (kg)
Ⓑ	934 300 026 0		II	550±2	$6^{+0.2}_{-0.5}$	15±1	18±1	12±0.3	$27^{0}_{-0.3}$	2.0±0.1	$25^{+0.5}_{0}$	$15^{+0.5}_{0}$	1.3	~0.050
Ⓐ	934 300 025 0		I	245±2	$6^{+0.2}_{-0.5}$	15±1	18±1	16.5±1	$27^{0}_{-0.3}$	2.0±0.1	$12^{+0.5}_{0}$	$8^{+0.2}_{0}$	1.5	~0.050
	934 300 021 0		I	465±2	$6^{+0.2}_{-0.5}$	15±1	18±1	16.5±1	$27^{0}_{-0.3}$	2.0±0.1	$12^{+0.5}_{0}$	$8^{+0.2}_{0}$	1.5	~0.054
	934 300 020 0		I	710±2	$6^{+0.2}_{-0.5}$	15±1	18±1	16.5±1	$27^{0}_{-0.3}$	2.0±0.1	$12^{+0.5}_{0}$	$8^{+0.2}_{0}$	1.5	~0.058
	934 300 019 0		I	345±2	$6^{+0.2}_{-0.5}$	15±1	18±1	16.5±1	$27^{0}_{-0.3}$	2.0±0.1	$12^{+0.5}_{0}$	$8^{+0.2}_{0}$	1.5	~0.052
	934 300 018 0		I	540±2	$6^{+0.2}_{-0.5}$	15±1	18±1	16.5±1	$27^{0}_{-0.3}$	2.0±0.1	$12^{+0.5}_{0}$	$8^{+0.2}_{0}$	1.5	~0.055
	934 300 017 0		I	410±2	$6^{+0.2}_{-0.5}$	15±1	18±1	16.5±1	$27^{0}_{-0.3}$	2.0±0.1	$12^{+0.5}_{0}$	$8^{+0.2}_{0}$	1.5	~0.053

GENERAL SPECIFICATION: JED-334
FURTHER TECHNICAL DATA:
DOC. CODE: SHEET: TO

GENERAL TOLERANCES

CLASS 1)	RANGE OF NOMINAL DIMENSIONS (± mm) ≤50	>50 ≤180	>180 ≤400	>400	∡
FINE	0,5	1,0	1,5	2,0	
MEDIUM	1,0	2,0	3,0	4,0	± 3°
COARSE	2,0	3,5	5,0	6,5	

TAPPED HOLES ACC. ISO 4039 / JED-152
1) TOLERANCE CLASS APPLIED CROSSMARKED

DCN-NO.	REV.	DATE
047494	2×B	91-07-03
045087	1×A	90-09-17

100mm

CADAM-DRAWING COPYRIGHT

DATE	SIGNATURE
88-05-13	SEEW.
CHECKED. 88-05-13	FRANIA
STANDARDIZATION. 88-05-13	PANT.

WABCO

DRAIN VALVE
ENTWAESSERUNGSVENTIL
VALVE DE PURGE
VALVOLA DI SPURGO

MASS	SCALE	PRODUCT IDENTIFICATION NO.	DOC. CODE	SHEET
KG	1:1	934 300 099 0	653	1/1
SIZE A 1	T.R.I. 140	SHAPE CODE	REPLACEMENT FOR	

EXPERT CODE 7 3 4

PRODUCT TYPE 0 1 X

TOUTE COMMUNICATION OU REPRODUCTION DE CE DOCUMENT, TOUTE EXPLOITATION OU COMMUNICATION DE SON CONTENU NE SONT PAS AUTORISEES SAUF AUTORISATION ECRITE. TOUS DROITS SERONT RESERVES EN CAS DE DEPOT DE BREVET, DE MODELE DE UTILITE OU DE DESSIN DE MODELE.
NON E' PERMESSO DIFFONDERE A TERZI O RIPRODURRE QUESTO DOCUMENTO, NE UTILIZZARE IL CONTENUTO O RENDERLO COMUNQUE ACCESSIBILE A TERZI. SONO RISERVATI I DIRITTI DI PROPRIETA' INTELLETTUALE IN CASO DI DEPOSITO DI BREVETTO, DI MODELLO DI UTILITA' O DI DISEGNO O MODELLO.
NON ES PERMITIDO COMUNICAR A TERCEROS, UTILIZAR O DAR A CONOCER EL CONTENIDO DE ESTE DOCUMENTO, SALVO EXPRESA AUTORIZACION. TODOS LOS DERECHOS SON RESERVADOS EN CASO DE PATENTE, MODELO DE UTILIDAD O DISEGNO.
MITTEILUNG DIESES DOKUMENTES, SEINE VERWENDUNG UND MITTEILUNG SEINES INHALTS SIND NICHT GESTATTET, SOWEIT NICHT AUSDRUECKLICH ZugESTANDEN. ZuZUERKENNENDE RECHTE WERDEN FUER DEN FALL DER PATENTERTEILUNG, GebRAUCHSmusTER-EINTRAGUNG oder DESIGN/MUSTER-EINTRAGUNG VORBEHALTEN.
THIS DOCUMENT IS THE SUBJECT OF COPYRIGHT. NO PART OF PATENT OR REGISTRATION OF A UTILITY MODEL OR DESIGN/MODEL MAY BE MADE WITHOUT THE PERMISSION OF THE OWNER.