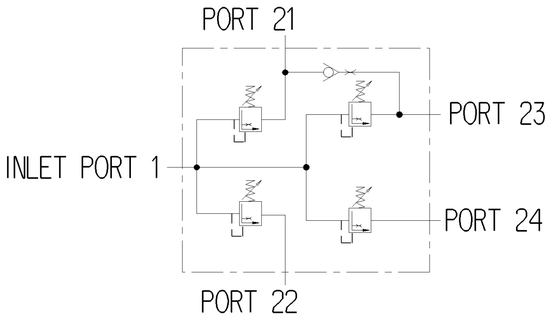

CIRCUIT DIAGRAM

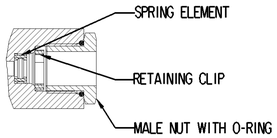

DESCRIPTION	M22x1.5 VOSS PART No.
MALE NUT WITH O-RING	00 62 03 99 00
RETAINER CLIP	00 62 01 90 00
SPRING ELEMENT	00 62 05 99 00

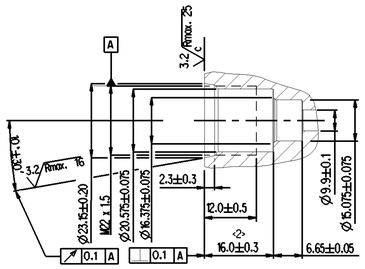

DETAILS OF PORT MACHINING FOR M22x1.5

ASSEMBLY PROCEDURE

(a)

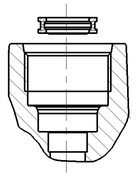

THE SPRING ELEMENT IS INSERTED INTO THE CHAMBER UNDER THE THREAD ROOT OF THE CONNECTION BORE (a) AND (b).

(b)

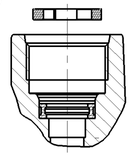

THE RETAINING CLIP IS INTRODUCED SO THAT IT RESTS FLAT ON THE THREAD ROOT (b) AND (c).
THE SPRING ELEMENT AND RETAINING CLIP ARE SYMMETRICAL.

(c)

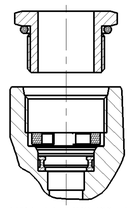

THE MALE FITTING PRE-ASSEMBLED WITH THE PRE-GREASED O-RING TO SEAL THE THREAD IS SCREWED BY HAND INTO THE TAPPED BORE (c) AND TIGHTENED.

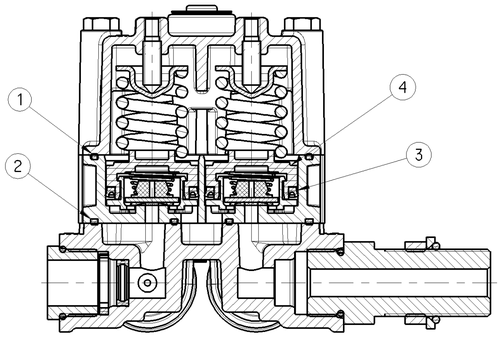

MSP_ _ _ _ REPAIR KIT (NO TO BE ALLOTTED)

SL.No	AL PART No	WABCO PART NO	DESCRIPTION	QTY
1		897 310 048 4	GASKET	1
2		897 310 047 4	GASKET	1
3		897 150 046 4	LIPSEAL	4
4		932 500 506 2	VALVE ASSEMBLY	4

NG 12 VOSS REPAIR KIT NUMBER
MSP3/130 NG12 VOSS MAJOR KIT
MSP3/124 NG12 VOSS MINOR KIT

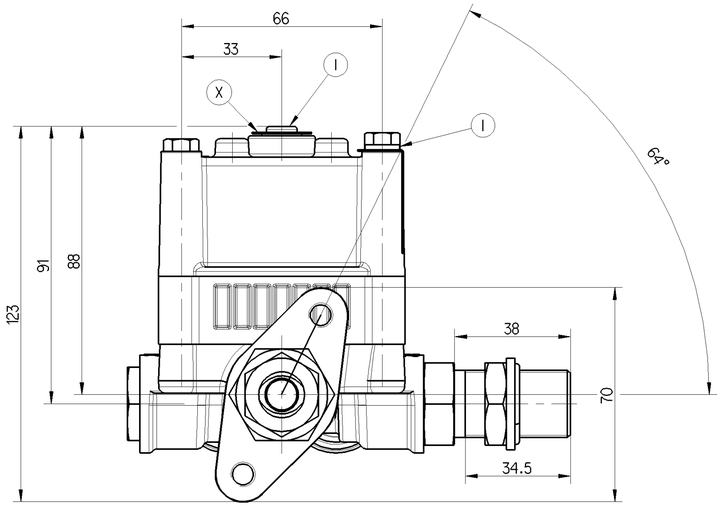

SL No.	NOTES	
1	PRODUCT SPECIFICATION AND RELIABILITY	
1.1	NORMAL WORKING PRESSURE	8 bar
1.2	MAXIMUM WORKING PRESSURE	10 bar
1.3	THERMAL RANGE OF OPERATION	-40°c TO +80°c
1.4	EQUIVALENT FLOW DIAMETER	7mm
1.5	CORROSION RESISTANCE 240 HOUR MINIMUM OF NSS IS APPLICABLE FOR BODY, COVER AND FASTENERS	
2	OPENING PRESSURE	REFER TABLE
3	RECOMMENDED INSTALLATION POSITION	4 SPRING HOUSING IN QSPV IS FACING GROUND
4	ELEMENTS ARE SET WITH AIR FLOW RATE OF 100 lts/min	
5	QUALITY COMPLIANCE TESTS WILL BE CARRIED OUT REGULARLY AS PER CLAUSE NO: 14 OF PSSC 9347020080____035	
<2> 6	OPEN PORTS AND MALE THREADS ARE FITTED WITH CLOSURE PLUGS/CLOSURE SLEEVES FOR STORAGE AND TRANSIT PURPOSE	
7	SERVICE LIFE TO FIRST OVERHAUL- 2 YEARS/ 1,80,000 KM WHICHEVER IS EARLIER IF FITTED AS PER RECOMMENDED LAYOUT	
8	PRESSURE FILLING SEQUENCE IS 21/22 → 24 → 23	

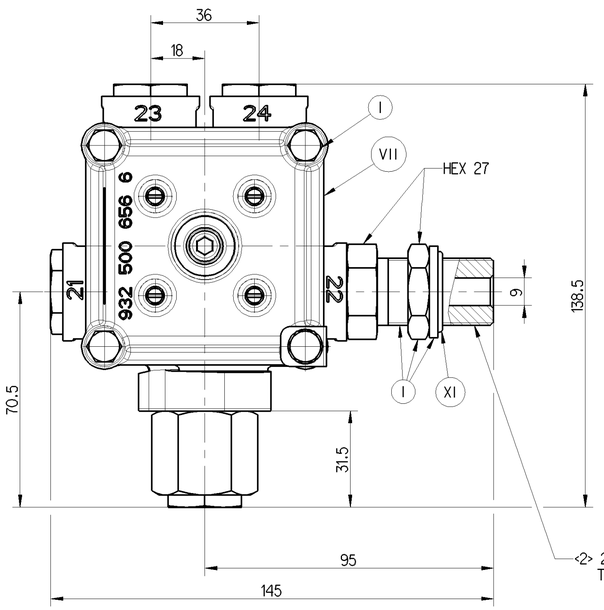

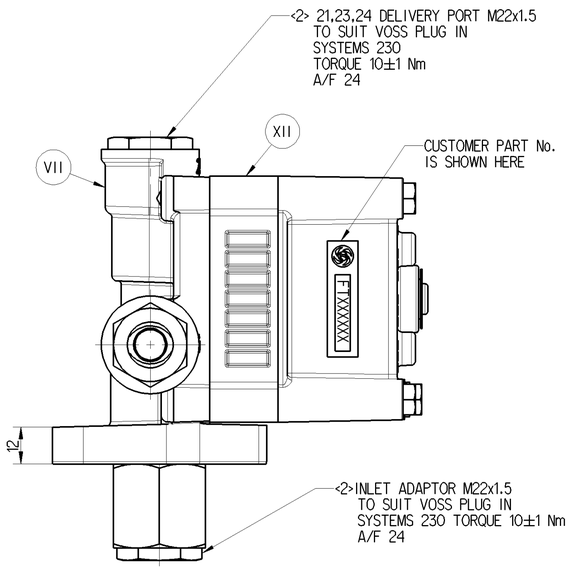

XVII	STEEL	NO TREATMENT
XVI	CAST IRON	PLATED
XV	STEEL	ZINC IRON PLATED
XIV	CAST IRON	NO TREATMENT
XIII	ZINC ALLOY	ANODISED
XII	PLASTIC	NO TREATMENT
XI	RUBBER	NO TREATMENT
X	STAINLESS STEEL	NO TREATMENT
IX	BRASS	NO TREATMENT
VIII	ZINC ALLOY	CHROMATED
VII	ALUMINIUM ALLOY	ANODISED
VI	ALUMINIUM ALLOY	CHROMATED
V	CAST IRON	PAINTED
IV	STEEL	POWDER COATED
III	STEEL	PAINTED
II	STEEL	PHOSPHATED
I	STEEL	ZINC PLATED
PART CODE	MATERIAL	SURFACE PROTECTION

PRESSURE SETTING

DYNAMIC OPENING PRESSURE(bar)			
21	22	23	24
6.4-0.2	6.4-0.2	7.2-0.2	6.8-0.2

DYNAMIC RETAINING PRESSURE (bar) (RECHARGING PRESSURE)				
INLET	21	22	23	24
P01	0	>P01-0.3	0	>P01-0.3*
P02	>P02-0.3	0	0	>P02-0.3*
P03	>P03-0.3	>P03-0.3	0	>P03-0.3
P04	>P04-0.3	>P04-0.3	0	0

STATIC RETAINING PRESSURE (bar)				
INLET	21	22	23	24
P01	0	>5	<1	>5
P02	>5	0	>5	>5
P03	>5	>5	0	>5
P04	>5	>5	0	0

* DURING P21 AND P22 FAILED CONDITION, P24 WILL FILL WHEN THE AIR FLOW RATE IS >200lpm

<1> SAFETY CHARACTERISTICS (▷0x)
<2> SIGNIFICANT CHARACTERISTICS (▷5x)

General Specification: JED-334-1 , Size ISO 14405 LP
Further Technical Data: 934 702 008 0
Doc. Code: 035 Sheet: 1 To 9
General Tolerances JED-261

Class 1)	Range of Nominal Dimensions (± mm) ≤ 50	> 50 ≤ 180	> 180 ≤ 400	> 400	∢
Fine		0.5	1.0	1.5	2.0	
Medium	X	1.0	2.0	3.0	4.0	±3°
Coarse		2.0	3.5	5.0	6.5	

Tapped Holes acc.
1) Tolerance Class Applied Crossmarked

Copyright WABCO®

Date	Signature
Drawn 2015-02-18	Aravinthan
Checked 2015-02-18	Subramanian
Expert	Murugan S

WABCO

QUADRUPLE CIRCUIT PROTECTION VALVE

Mass	Scale	Material No.	Date of first issue: 2015-02-18		
0.965 kg	1:1	934 702 014 0	Doc.Code 005	Language EN	Sheet 1/1
Size A 1	CAD System CREO		ECN-No. -	Revision - -	Techn. Resp. 5120
			Replacement for -		

100mm

Tout Communication ou reproduction de ce document, toute exploitation ou communication de son contenu sont interdites, sauf autorisation expresse. Tout manquement à cette règle constitue un délit, exposant son auteur au versement de dommages et intérêts. Tous droits réservés, notamment en cas de dépôt de brevet, d'enregistrement d'un modèle d'utilité ou d'un dessin.

Weitergabe sowie Verwertung dieser Unterlage, Verwendung und Mitteilung ihres Inhalts nicht gestattet, soweit nicht ausdrücklich zugestanden. Zuwiderhandlungen verpflichten zu Schadenersatz. Alle Rechte für den Fall der Patenterteilung oder Gebrauchsmuster-Eintragung vorbehalten.

Non è permesso consegnare o farne o riprodurre questo documento, né utilizzarne il contenuto o renderlo comunque noto a terzi senza autorizzazione espressa. Ogni infrazione costituisce un illecito civile e comporta il risarcimento dei danni subiti.

Copyright of this document and giving it to others and the use or communication of its contents thereof, are forbidden without express authority. Contravention of this restriction will constitute an evident delict and result in a liability to the payment of damages. All rights are reserved in the event of the grant of a patent or registration of a utility model or design. The document is the property of WABCO.