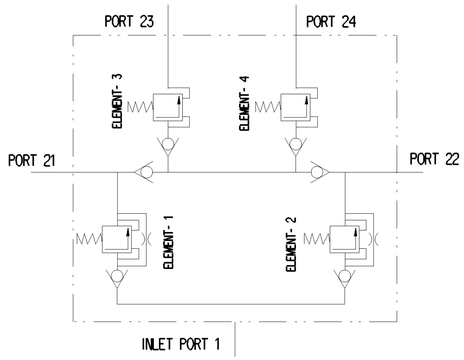

CIRCUIT DIAGRAM

Ⓐ FITTINGS AT THE PORTS (1) AND (2)

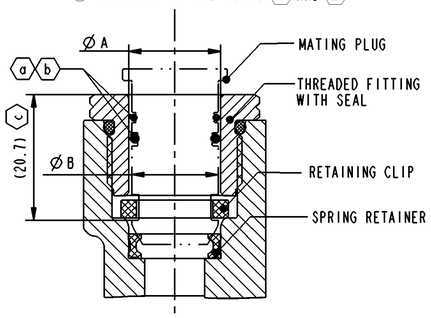

PORT	Ø A	Ø B
JED-388-0-M22x1.5	Ø 15 $^{+0.043}$	(Max. Ø 14.95)
JED-388-0-M16x1.5	Ø 9.5 $^{+0.036}$	(Max. Ø 9.45)

(a) ASSEMBLY LOAD NOT TO EXCEED 80 N WITH PREGREASE ON SEALS.

(b) SEALS ON THE PLUG ARE THE RESPONSIBILITY OF PLUG MANUFACTURER WITH REFERENCE TO DIMENSION "ØA" & "ØB".

(c) MAXIMUM INSERTION DEPTH OF PLUG TILL LOCKING.

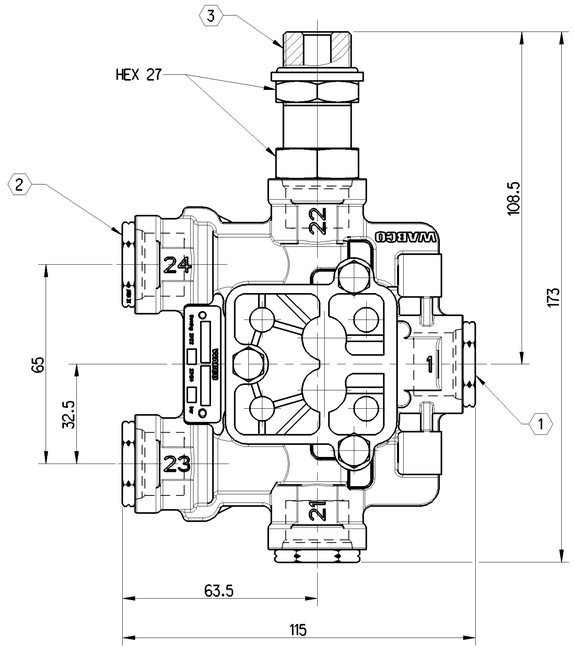

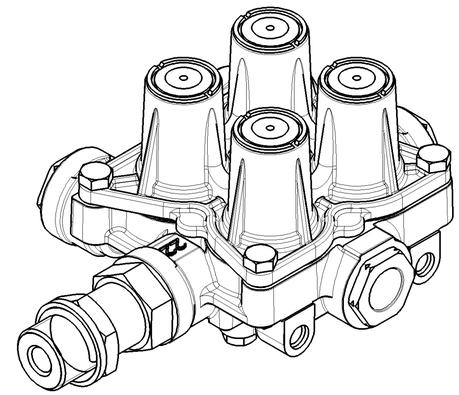

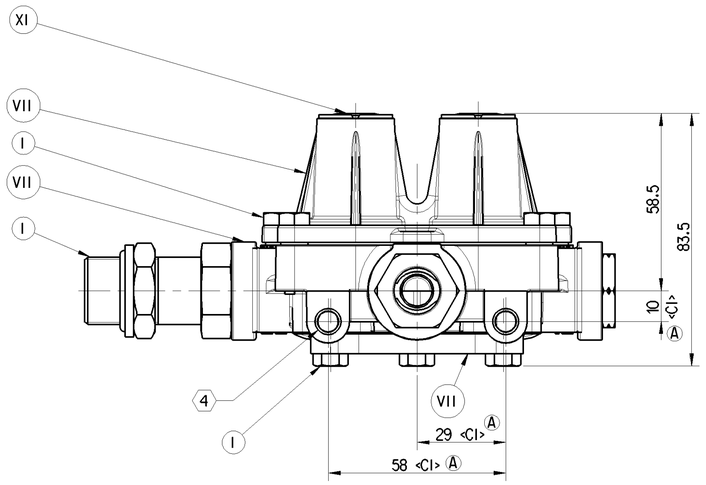

SL No.	NOTES	
1	PRODUCT SPECIFICATION AND RELIABILITY	
1.1	NORMAL WORKING PRESSURE	10 bar
1.2	MAXIMUM WORKING PRESSURE	13 bar
1.3	THERMAL RANGE OF OPERATION	-40°c TO +80°c
1.4	EQUIVALANT FLOW DIAMETER	7 mm
2	RECOMMENDED INSTALLATION POSITION	4 SPRING HOUSING IN QSPV FACING GROUND
3	OPENING PRESURE	REFER TABLE
4	ELEMENTS ARE SET WITH AIR FLOW RATE OF 90 NORMAL l/min	
5	QUALITY COMPLIANCE TESTS WILL BE CARRIED OUT REGULARLY AS PER CLAUSE No. 13 OF PS 934 702 036 0____035	
6	OPEN PORTS AND MALE THREADS ARE FITTED WITH CLOSURE PLUGS / CLOSURE SLEEVES FOR STORAGE AND TRANSIT PURPOSE	
7	SERVICE LIFE TO FIRST OVERHAUL - 3 YEARS / 3,00,000 KM WHICH EVER IS EARLIER IS FITTED AS PER RECOMMENDED LAYOUT	

PART CODE	MATERIAL	SURFACE PROTECTION
XVII	STEEL	NO TREATMENT
XVI	CAST IRON	PLATED
XV	STEEL	ZINC IRON PLATED
XIV	CAST IRON	NO TREATMENT
XIII	ZINC ALLOY	ANODISED
XII	PLASTIC	NO TREATMENT
XI	RUBBER	NO TREATMENT
X	STAINLESS STEEL	NO TREATMENT
IX	BRASS	NO TREATMENT
VIII	ZINC ALLOY	CHROMATED
VII	ALUMINIUM ALLOY	ANODISED
VI	ALUMINIUM ALLOY	CHROMATED
V	CAST IRON	PAINTED
IV	STEEL	POWDER COATED
III	STEEL	PAINTED
II	STEEL	PHOSPHATED
I	STEEL	ZINC PLATED

Ⓐ (1) <CI> INLET CONNECTION M22x1.5 HEX. 24 FITTINGS TO SUIT MATING SYSTEM EQUIVALENT TO VOSS 230 TORQUE 10±1 Nm

Ⓐ (2) 3x <CI> DELIVERY CONNECTION 21, 23 AND 24, M22x1.5 HEX. 24 FITTINGS TO SUIT MATING SYSTEM EQUIVALENT TO VOSS 230 TORQUE 10±1 Nm

Ⓐ (3) <CI> DELIVERY CONNECTION 22, M22x1.5 TORQUE 50.5±2.5 Nm

Ⓐ (4) 2x <CI> TAPPED HOLES M8x1.25 DEPTH 12 mm TORQUE 20±2 Nm

DYNAMIC OPENING PRESSURE (bar) ELEMENTS				RETAINED PRESSURE (bar)			
PORT 21	PORT 22	PORT 23	PORT 24	PORT 21	PORT 22	PORT 23	PORT 24
7.35±0.15	7.35±0.15	7.05±0.15	7.05±0.15	0	≥ 6.8	≥ 6.6	≥ 6.6
				≥ 6.8	0	≥ 6.6	≥ 6.6
				≥ 4.7	≥ 4.7	0	≥ 6.6
				≥ 4.7	≥ 4.7	≥ 6.6	0

General Specification: JED-334-1
Further Technical Data: 934 702 036 0
Doc. Code: 035 Sheet: 1 To 8

General Tolerances JED-261

Class 1)		Range of Nominal Dimensions (± mm) ≤ 50	> 50 ≤ 180	> 180 ≤ 400	> 400	∢
Fine		0.5	1.0	1.5	2.0	±3°
Medium	X	1.0	2.0	3.0	4.0	
Coarse		2.0	3.5	5.0	6.5	

Tapped Holes acc. - JED-388
1) Tolerance Class Applied Crossmarked

Copyright WABCO®

	Date	Signature
Drawn	2021-10-06	Chrislosolomon D
Checked	2021-10-06	Zowiszo
Expert	Sohul Hameed	

WABCO

QUADRUPLE SYSTEM PROTECTION VALVE

Mass	Scale	Material No.	Date of first issue: 2015-10-08	
1.06 KG	1:1	934 702 036 0	Doc.Code 005	Language EN / Sheet 1/1
Size A 1	CAD System CREO			

ECN-No.	Revision	Techn. Resp.	Replacement for
507070	8x A	5120	-

100mm

Tout Communication ou reproduction de ce document, toute exploitation ou communication de son contenu sont interdites, sauf autorisation écrite. Tous droits de propriété industrielle réservés. Le dépôt de ce document, de ses annexes ou pièces jointes, constitue une publication susceptible de porter atteinte à nos droits de propriété intellectuelle et industrielle. Tous droits de propriété industrielle réservés, notamment en matière de brevets et de modèles.

Weitergabe sowie Vervielfältigung dieser Unterlage, Verwertung und Mitteilung ihres Inhalts nicht gestattet, soweit nicht ausdrücklich zugestanden. Zuwiderhandlungen verpflichten zu Schadenersatz. Alle Rechte für den Fall der Patenterteilung oder Eintragung eines Gebrauchsmusters vorbehalten. Alle Rechte auf geistiges Eigentum vorbehalten.

Mais é permisso comunicar a terceiros ou reproduzir este documento, ou utilizar o conteúdo ou conceito contido ou mesmo outro fim para o qual foi concebido. Todos os direitos de propriedade industrial reservados.

Copying of this document and giving it to others and the use or communication of the contents thereof, are forbidden without express authority. Offenders are liable to the payment of damages. All rights are reserved in the event of the grant of patent or registration of a utility model or design. This document is the subject of copyright.