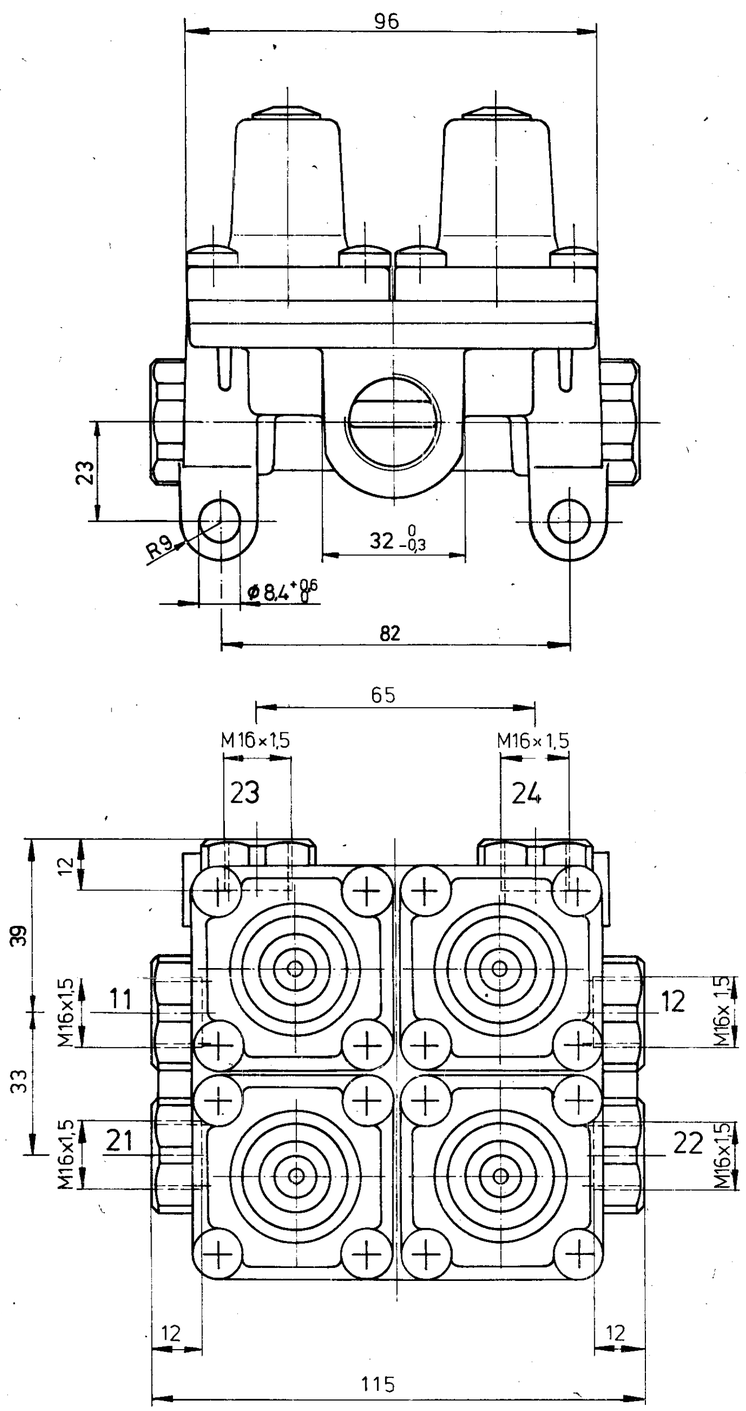

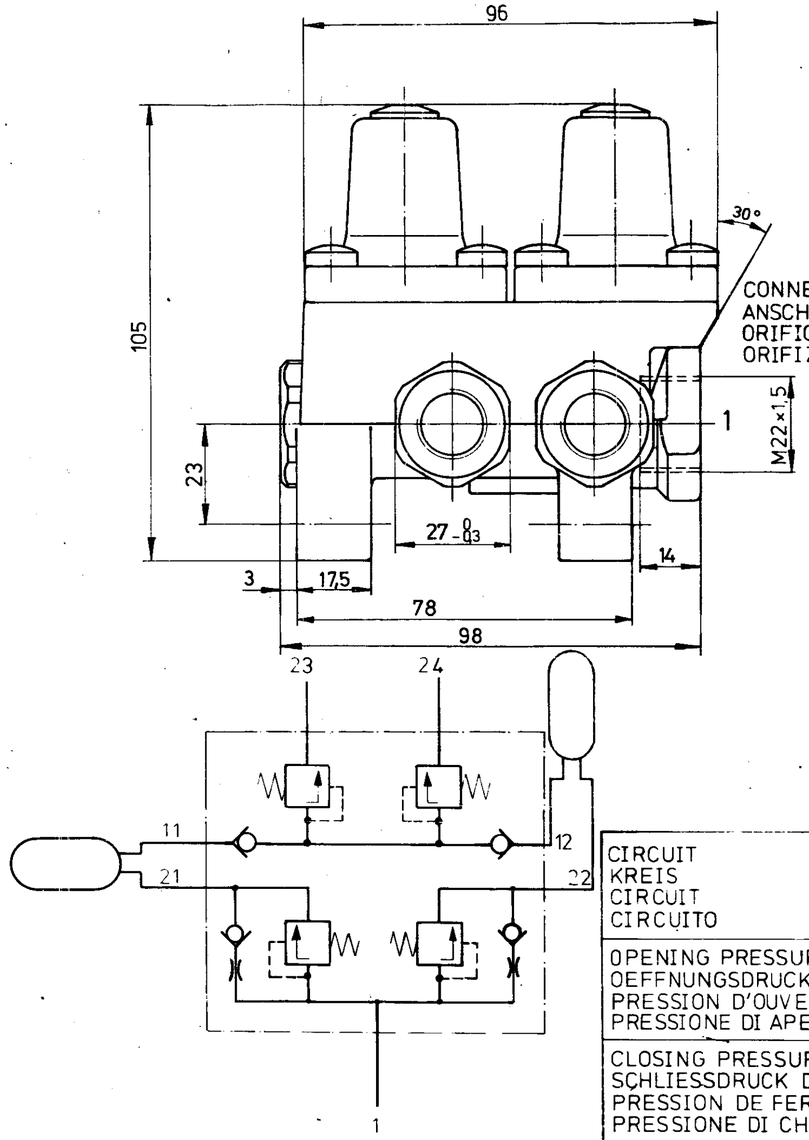

SERVICE PRESSURE :
BETRIEBSDRUCK : MAX. 20bar
PRESSION DE SERVICE :
PRESSIONE D'ESERCIZIO:

MEDIUM : AIR
MEDIUM : LUFT
MILIEU : AIR
FLUIDO : ARIA

CONNECTIONS:
ANSCHLUESSE:
ORIFICES:
ORIFIZI:

1, 11, 12 = SUPPLY
= LUFTEINTRITT
= ALIMENTATION
= ALIMENTAZIONE

21 = CIRCUIT 1
= KREIS 1
= CIRCUIT 1
= CIRCUITO 1

22 = CIRCUIT 2
= KREIS 2
= CIRCUIT 2
= CIRCUITO 2

23 = CIRCUIT 3
= KREIS 3
= CIRCUIT 3
= CIRCUITO 3

24 = CIRCUIT 4
= KREIS 4
= CIRCUIT 4
= CIRCUITO 4

CIRCUIT KREIS CIRCUIT CIRCUITO	21	22	23	24
OPENING PRESSURE [bar] * OEFFNUNGSDRUCK [bar] PRESSION D'OUVERTURE [bar] PRESSIONE DI APERTURA [bar]	7-0,3			
CLOSING PRESSURE DYNAMIC [bar] SCHLIESSDRUCK DYNAMISCH [bar] PRESSION DE FERMETURE DYNAM. [bar] PRESSIONE DI CHIUSURA DINAM. [bar]	≧5			
CLOSING PRESSURE STATIC [bar] AT FAILURE OF CIRCUIT .... SCHLIESSDRUCK STATISCH [bar] BEI AUSFALL VON KREIS	0	≧4,5	≧6,7	
	≧4,5	0	≧6,7	
PRESSION DE FERMETURE STAT. [bar] EN CAS DE DEFAILLANCE DU CIRCUIT	4,5+0,7 Ⓐ		0	4,5+0,7 Ⓐ
PRESSIONE DI CHIUSURA STATICO [bar] IN CASO DI DIFETTO DEL CIRCUITO	4,5+0,7 Ⓐ		4,5+0,7 Ⓐ	0

*) OPENING PRESSURE = MAINTAINED PRESSURE
OEFFNUNGSDRUCK = GESICHERTER DRUCK
PRESSION D' OUVERTURE = PRESSION MAINTENUE
PRESSIONE DI APERTURA = PRESSIONE MAINTENUTA

ADMISSIBE TEMPERATURES
THERMISCHER ANWENDUNGSBEREICH - 40°...+90°
TEMPERATURE DE SERVICE
TEMPERATURA D'ESERCIZIO

77-08-16	Warendorf	WABCO WESTINGHOUSE
77-08-16	Bornhof	PROTECTION VALVE (FOR 4 CIRCUITS) VALVE DE PROTECTION (A 4 CIRC.) VALVOLA DI PROTEZIONE (A 4 CIRC.) SCHUTZVENTIL (FUER 4-KREIS-ANL)
77-08-17	[illegible]	
33232	4×Ⓐ 85.10.24	MASS 1,2 · SCALE 1:1 · 934 702 220 0 · SHEET 1/1
		A 2 · 140 · 605

100 mm