SURFACE PROTECTION OBERFLAECHENSCHUTZ PROTECTION DE SURFACE PROTEZIONE SUPERFICIALE	I JED-259
	II JED-256
	III JED-352

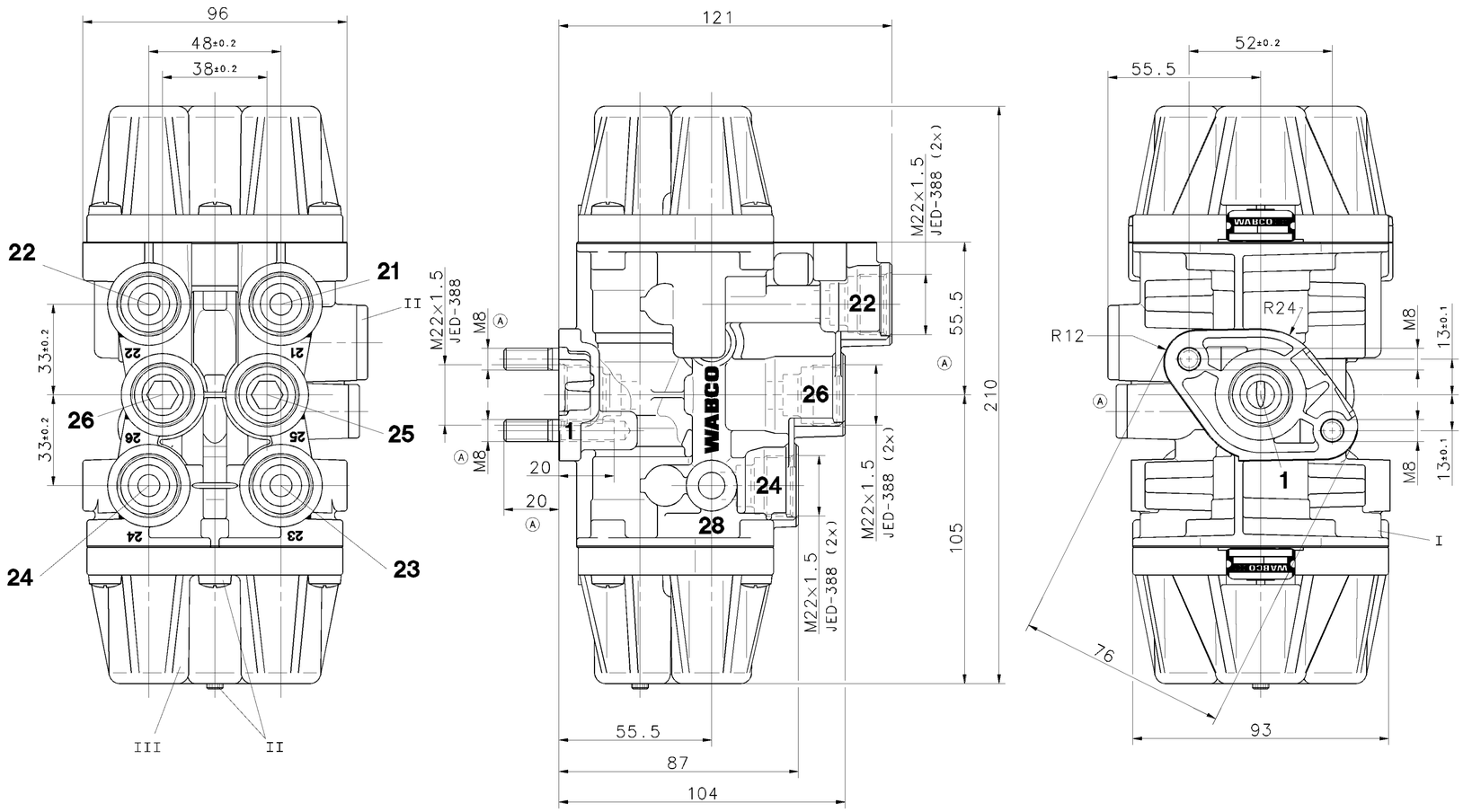

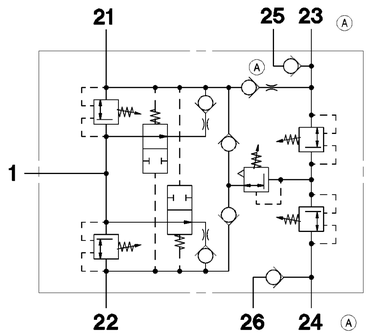

THERMAL RANGE OF CONTINUOUS APPLICATION:
THERMISCHER DAUERANWENDUNGSBEREICH:
PLAGE DE TEMPERATURE EN UTILISATION CONTINUE:
COMPO DI APPLICAZIONE CONTINUA: -40°C....+80°C

MEDIUM: COMPRESSED AIR
MEDIUM: DRUCKLUFT
FLUIDE: AIR COMPRIME
FLUIDO: ARIA COMPRESSA

WORKING PRESSURE: Ⓐ
BETRIEBSDRUCK:
PRESSION DE SERVICE: p_e max.=10.2bar
PRESSIONE D' ESERCIZIO:

INSTALLATION POSITION OPTIONAL
EINBAULAGE BELIEBIG
POSITION D' INSTALLATION A VOLONTE
POSIZIONE DI MONTAGGIO A SCELTA

CONNECTIONS: ANSCHLUESSE: ORIFICES: ORIFIZI:	1	FROM AIR DRYER VOM LUFTTROCKNER DE DESSICATEUR D'AIR ESSICATORE D'ARIA	
	21	CIRCUIT KREIS CIRCUIT CIRCUITO	1
	22		2
	23, 25 Ⓐ		3
	24, 26 Ⓐ		4

PRESSURE DRUCK [bar] PRESSION PRESSIONE	CIRCUIT KREIS 1+2 CIRCUIT CIRCUITO	CIRCUIT KREIS 3+4 CIRCUIT CIRCUITO
OPENING PRESSURE : OEFFNUNGSDRUCK : dyn. PRESSION D'OUVERTURE : PRESSIONE DI APERTURA:	Ⓐ $8.6^{0}_{-0.3}$	$7.5^{0}_{-0.3}$
CLOSING PRESSURE : SCHLIESSDRUCK : dyn. PRESSION DE FERMETURE: PRESSIONE DI CHIUSURA:	Ⓐ ≥ 6.6	≥ 4.5
PRESSURE LIMITING DRUCKBEGRENZUNG LIMITATION DE PRESSION LIMITAZIONE DI PRESSIONE	/	$8.5^{0}_{-0.4}$

GENERAL SPECIFICATION: JED-334					
FURTHER TECHNICAL DATA:					
DOC. CODE:	SHEET: TO				
GENERAL TOLERANCES					
CLASS 1)	RANGE OF NOMINAL DIMENSIONS (± mm) ≤50	> 50 ≤180	>180 ≤400	>400	
FINE	0,5	1,0	1,5	2,0	
MEDIUM	1,0	2,0	3,0	4,0	± 3°
COARSE	2,0	3,5	5,0	6,5	
TAPPED HOLES ACC. ISO 4039 / JED-152					
1) TOLERANCE CLASS APPLIED CROSSMARKED					

DCN-NO.	REV.	DATE
069455	13×A	01-05-18

100mm

CADAM-DRAWING COPYRIGHT		WABCO
DATE	SIGNATURE	
DRAWN: 96-09-16	HERZOG	QUADRUPLE CIRCUIT PROTECTION VALVE VIERKREIS-SCHUTZVENTIL VALVE DE PROTECTION (A 4 CIRCUITS) VALVOLA DI PROTEZIONE (A 4 CIRC.)
CHECKED: 96-09-16	DEIKE	
STANDARDIZATION:		

MASS	SCALE	PRODUCT IDENTIFICATION NO.	DOC. CODE	SHEET
1.45 KG	1:1	934 705 004 0	605	1/1
SIZE A 1	I.R.I. 140		SHAPE CODE	REPLACEMENT FOR

EXPERT CODE 7 3 1 PRODUCT TYPE 0 0

TOUTE COMMUNICATION OU REPRODUCTION DE CE DOCUMENT, TOUTE EXPLOITATION OU COMMUNICATION DE SON CONTENU NON ESTIMES INTERDITES SANS AUTORISATION ECRITE. TOUTES DONATIONS DE BREVET, DE MODELE D'UTILITE OU DE MARQUE DE FABRIQUE OU DE DEPOT DE MODELE D'UTILITE RESERVES.
NON È PERMESSO CONSEGNARE A TERZI, O RIPRODURRE QUESTO DOCUMENTO, NE UTILIZZARNE IL CONTENUTO O RENDERLO ACCESSIBILE A TERZI SENZA AUTORIZZAZIONE SCRITTA. TUTTI I DIRITTI DI BREVETTO, DI MODELLO DI UTILITÀ O DI MARCHIO DI FABBRICA SONO RISERVATI.
WELCHERLEI KOPIE, WIEDERGABE UND MITTEILUNG DIESES DOKUMENTES UND DER DARIN ENTHALTENEN INFORMATIONEN SOWIE DER VERWERTUNG DERSELBEN SOWIE DER ERTEILUNG VON BENUTZERRECHTEN SOWIE DER ANMELDUNG VON SCHUTZRECHTEN WIE PATENTEN, GEBRAUCHSMUSTERN UND MARKEN BLEIBT EINER WETTBEWERBSRECHTLICHEN VEREINBARUNG VORBEHALTEN.
COPYING OF THIS DOCUMENT AND GIVING IT TO OTHERS AND THE USE OR COMMUNICATION OF THE CONTENTS THEREOF, ARE FORBIDDEN WITHOUT EXPRESS AUTHORITY. OFFENDERS ARE LIABLE TO THE PAYMENT OF DAMAGES. ALL RIGHTS ARE RESERVED IN THE EVENT OF THE GRANT OF PATENT OR REGISTRATION OF A UTILITY MODEL OR DESIGN. THIS DOCUMENT IS THE SUBJECT OF COPYRIGHT.