MEASURING PRINCIPLE: PIEZO-RESISTIVE MESSPRINZIP : PIEZORESISTIV PUINCIPE DE MESURE : PIEZORESISTIF PRINCIPO DI MISURA : PIEZORESISTIVO	
SUPPLY VOLTAGE SPEISESPANNUNG TENSION D'ALIMENTATION TENSIONE D'ALIMENTAZIONE	5 V DC ±10%
CURRENT CONSUMPTION STROMAUFNAHME CONSOMMATION DE COURANT ASSORBIMENTO DI CORRENTE	MAX. 20mA
THERMAL RANGE OF APPLICATION THERMISCHER ANWENDUNGSBEREICH PLAGE DE TEMPERATURE EN UTILISATION CAMPO TERMICO DI APPLICAZIONE	-40° C...+80° C
MEASURING RANGE: 0-12 bar RELATIVE PRESSURE MESSBEREICH : 0-12 bar RELATIVDRUCK ZONE DE MESURE : 0-12 bar PRESSION RELATIVE CAMPO DI MISURA: 0-12 bar PRESSIONE RELATIVA	
ADMISSIBLE OVERPRESSURE ZULAESSIGER UEBERDRUCK ADMISSIBLE SURPRESSION AMMISSIBLE SOVRAPRESSIONE	16 bar

POSITION OF INSTALLATION: EINBAULAGE : POSITION D'INSTALLATION : POSIZIONE DI MONTAGGIO :	OPTIONAL BELIEBIG AU CHOIX A PIACERE
** DIMENSION ABMESSUNG DIMENSION DIMENSIONE	DIN 72 585
OFFSET OFFSET DEPLACEMENT DE VALEURS DIFFERIMENTO DEL VALORI DI MISURA	1 V
SENSITIVITY EMPFINDLICHKEIT SENSIBILITE SENSIBILITA	250 mV / bar
LINEARETY LINEARITAET LINEARITE LINEARITA	≤±0.3%FS
HYSTERESIS HYSTERESE HYSTERESIS ISTERESI	≤ 0.2%FS

***** IN THIS AREA PRI NO. AND DATE OF MANUFACTURE STAMPED.LETTERING 2mm HIGH 0.5mm DEEP
IN DIESEM BEREICH PRI-NR. UND HERSTELLDATUM GEPRAEGT.SCHRIFT 2mm HOCH 0,5mm TIEF
DANS CETTE ZONE NUMERO PRI ET DATE DE FABRICATION FRAPPES.ECRITURE 2mm ELEVEE 0,5mm PROFONDE
IN QUESTA ZONA NUMERO PRI E DATA DI FABBRICAZIONE IMPRESSI.CARATTERI 2mm ALTI 0,5mm PROFONDI.

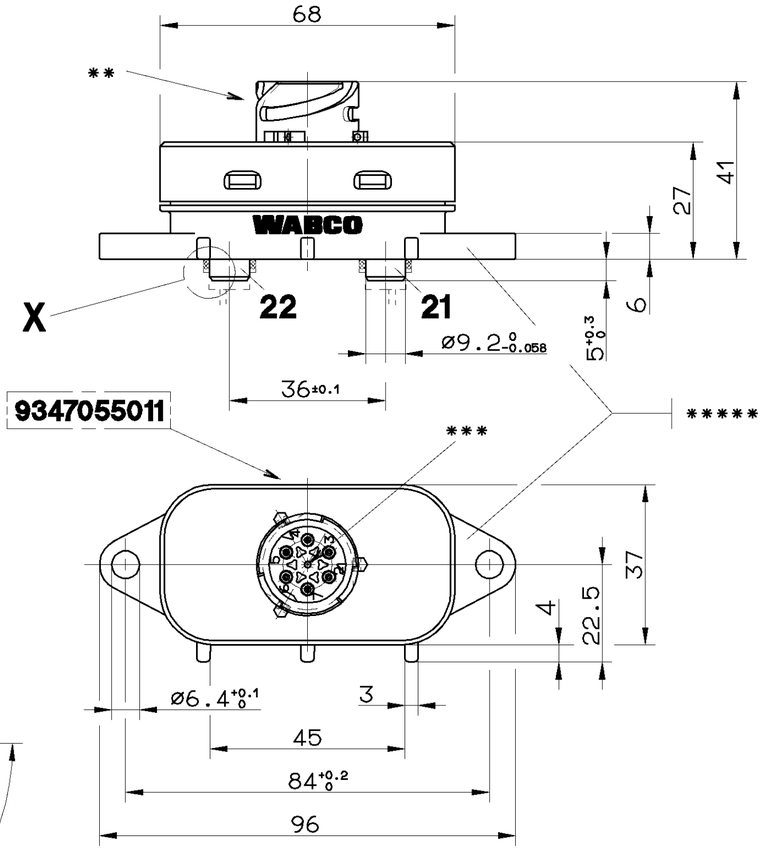

THE CONNECTION TO ATMOSPHERE MUST LEAD THROUGH WATER-TIGHT CABLING TO A PROTECTED AREA (E.G. IN DRIVERS CAB).
DIE VERBINDUNG ZUR ATMOSPHAERE MUSS UEBER EINE WASSERDICHTE
*** VERKABELUNG ZU EINEM GESCHUETZTEN ORT FUEHREN (Z.B. IM FAHRERHAUS).
LE CONNEXION A L'ATMOSPHERE DOIT PASSER PAR UN CABLAGE ETANCHE A L'EAU A UNE ZONE PROTEGEE (PAR EXAMPLE: LA CABINE DU CONDUCTEUR).
LA CONNESSIONE ALL'ATMOSFERA DEVE PASSARE ATTRAVERSO UN CABLEGGIO STANGO IN UNA ZONA PROTETTA (COME LA CABINA DEL CONDUCENTE).

O-RING :		(NOT SUPPLIED)
O-RING :		(GEHOERT NICHT ZUM LIEFERUMFANG)
**** JOINT TORIQUE :	8.9±0.17 x 1.9±0.08	(NON FUORNI)
O-RING :		(NON SI FORNISCONO)

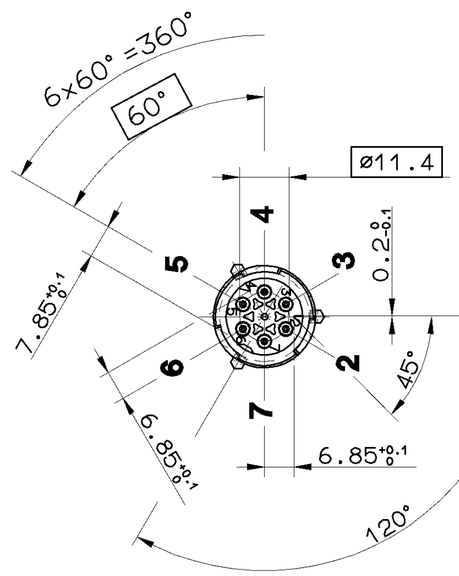

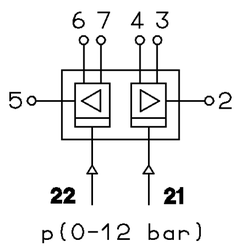

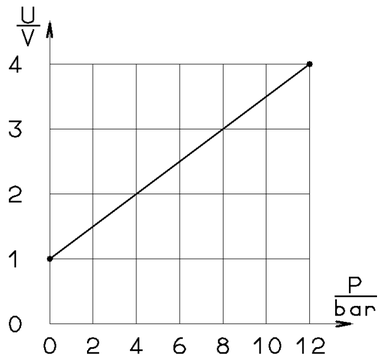

X 2:1

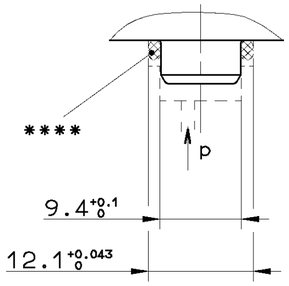

* ≙ COMPLEMENT WITH CONTACTS
KONTAKTBELEGUNG
EQUIPEMENT DE CONTACTS
APPLICAZIONE DEI CONTATTI

CIRCUIT KREIS CIRCUIT CIRCUITI **21**			CIRCUIT KREIS CIRCUIT CIRCUITI **22**		
2	**3**	**4**	**5**	**6**	**7** *)
OUTPUT AUSGANG SORTIE USCITA	+5 VDC	0 V	OUTPUT AUSGANG SORTIE USCITA	+5 VDC	0 V

GENERAL SPECIFICATION: JED-334					
FURTHER TECHNICAL DATA: 934 705 501 1					
DOC. CODE: 535 SHEET: 1 TO END					
GENERAL TOLERANCES					
CLASS 1)	RANGE OF NOMINAL DIMENSIONS (± mm) ≤50	> 50 ≤180	>180 ≤400	>400	∡
FINE	0,5	1,0	1,5	2,0	
MEDIUM	1,0	2,0	3,0	4,0	± 3°
COARSE	2,0	3,5	5,0	6,5	
TAPPED HOLES ACC. ISO 4039 / JED-152					
1) TOLERANCE CLASS APPLIED CROSSMARKED					

DCN-NO.	REV.	DATE
60267	B	96-04-17
57829	A	95-11-20

CADAM-DRAWING COPYRIGHT		
DATE	SIGNATURE	
95-05-03	DRAWN: THIMM	
95-05-03	CHECKED: GEORGI	
95-05-03	STANDARDIZATION: PANTZER	
MASS 0.140 KG	SCALE 1:1 (2:1)	PRODUCT IDENTIFICATION NO. 934 705 501 1
SIZE A 2	T.R.I. 142	

WABCO

PRESSURE SENSOR UNIT
DRUCKSENSOR-EINHEIT
UNITE DE CAPTEUR DE PRESSION
UNITA DI SENSORE DI PRESSIONE

DOC. CODE	SHEET
605	1/1
SHAPE CODE	REPLACEMENT FOR
	8849038851

100mm

EXPERT CODE 7 7 1

PRODUCT TYPE 0 2 X

1909/012/3/04.93

605/653

TOUTE COMMUNICATION OU REPRODUCTION DE CE DOCUMENT, TOUTE EXPLOITATION OU COMMUNICATION DE SON CONTENU SONT INTERDITES SAUF AUTORISATION ECRITE. LA VIOLATION OBLIGE A DES DOMMAGES ET INTERETS. TOUS DROITS DE PROPRIETE INDUSTRIELLE RESERVES. NOTAMMENT EN MATIERE DE BREVETS ET DE MODELES.
WEITERGABE SOWIE VERVIELFAELTIGUNG DIESES UNTERLAGE, VERWERTUNG UND MITTEILUNG IHRES INHALTS NICHT GESTATTET SOWEIT NICHT AUSDRUECKLICH ZUGESTANDEN. ZUWIDERHANDLUNGEN VERPFLICHTEN ZU SCHADENERSATZ. ALLE RECHTE FUER DEN FALL DER PATENTERTEILUNG ODER GEBRAUCHSMUSTER-EINTRAGUNG VORBEHALTEN.
NON E PERMESSO CONSEGNARE A TERZI O RIPRODURRE QUESTO DOCUMENTO, NE UTILIZZARNE IL CONTENUTO O RENDERNE ESPLICITA ALTRUI PUBLICAZIONE. LA VIOLAZIONE COMPORTA IL RISARCIMENTO DEI DANNI. SALVO DIRITTI DI PROPRIETA' INDUSTRIALE. E FATTA RISERVA DI TUTTI I DIRITTI DERIVANTI DA BREVETTI O MODELLI.
COPYING OF THIS DOCUMENT AND GIVING IT TO OTHERS AND THE USE OR COMMUNICATION OF THE CONTENTS THEREOF, ARE FORBIDDEN WITHOUT EXPRESS AUTHORITY. OFFENDERS ARE LIABLE TO PAY DAMAGES. ALL RIGHTS ARE RESERVED IN THE EVENT OF THE GRANT OF PATENT OR REGISTRATION OF A UTILITY MODEL OR DESIGN. THIS DOCUMENT IS THE SUBJECT OF COPYRIGHT.