FLOW RATE = 16-35 l/min
AT P23 = 8, P21 = 0 bar
WHEN P21 DROPS TO ZERO
RETAINED P23 = 1bar MAX

DURCHFLUSSMENGE = 16-35 l/min
BEI P23 = 8, P21 = 0 bar
WENN P21 AUF NULL ABFALLT
GESICHERTER DRUCK P23 = 1bar MAX

DEBIT= 16-35 l/min
SCUS P23 = 8, P21 = 0 bar
SI P21 TOMBE A ZERO
LA PRESSION MAINTENUE A P23 = 1bar MAX

PORTATA = 16-35 l/min
PER P23 = 8, P21 = 0 bar
SE P21 CALC A ZERO
LA PRESSIONE MANTENUTA A P23 = 1bar MAX

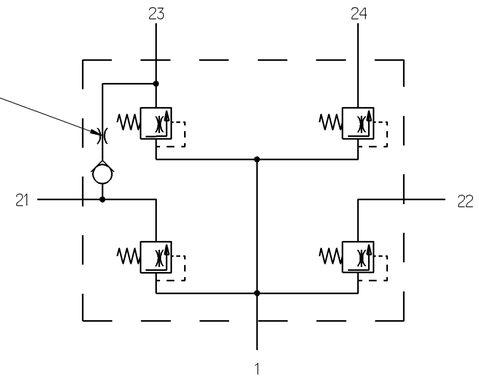

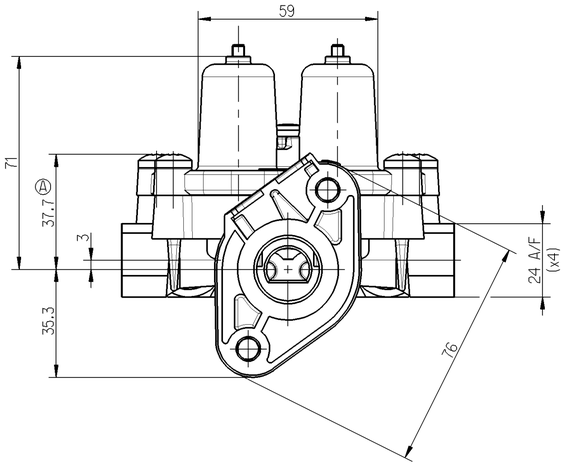

SCALE
MASSTAB
ECHELLE 1:2
SCALA

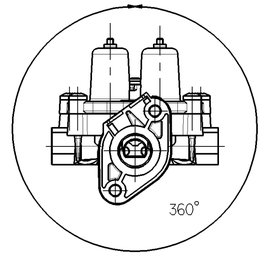

CORROSION PROTECTION
ALUMINIUM PARTS CHROMATED
TO JED-259
SCREWS MECHANICALY ZINC
PLATED TO JED-256-1

KORROSIONSSCHUTZ
ALUMINIUMTEILE CHROMIERT
GEMASS JED-259
SCHRAUBEN MECHANISCH VERZINKT
GEMASS JED-256-1

PROTECTION ANTICORROSIVE
PIECES ALUMINIUM CHROMEES
POUR JED-259
VIS MECANIQUEMENT ZINGUEES
POUR JED-256-1

PROTEZIONE ANTICORROSIONE
PEZZI IN ALUMINIO CROMATI
PER JED-259
VITI MECCANICAMENTE ZINCATE E
PER JED-256-1

CONNECTIONS ANSCHLUESSE ORIFICES ORIFIZI		SUPPLY LUFTEINTRITT ALIMENTATION ALIMENTAZIONE
	1-	
21-	CIRCUIT 1 KREIS 1 CIRCUIT 1 CIRCUITO 1	22- CIRCUIT 2 KREIS 2 CIRCUIT 2 CIRCUITO 2
23-	CIRCUIT 3 KREIS 3 CIRCUIT 3 CIRCUITO 3	24- CIRCUIT 4 KREIS 4 CIRCUIT 4 CIRCUITO 4

VALVE MAY BE MOUNTED AT ANY ANGLE
VENTIL KANN IN BELIEBIGER LAGE MONTIER WERDEN
LA SOUPAPE PEUT ETRE INSTALLE A N'IMPORTE QUEL ANGLE
VALVOLA MONTABBILE A QUALSIASI ANGOLO

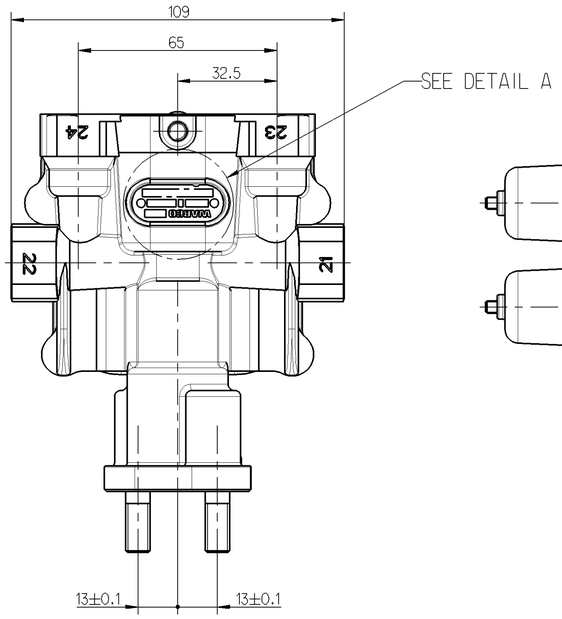

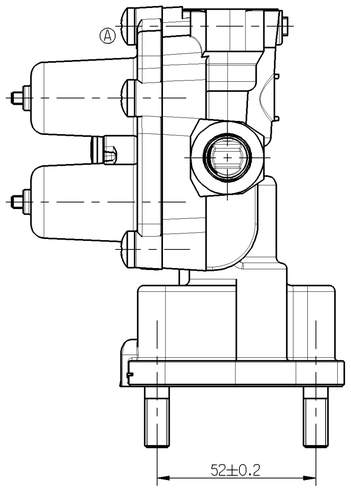

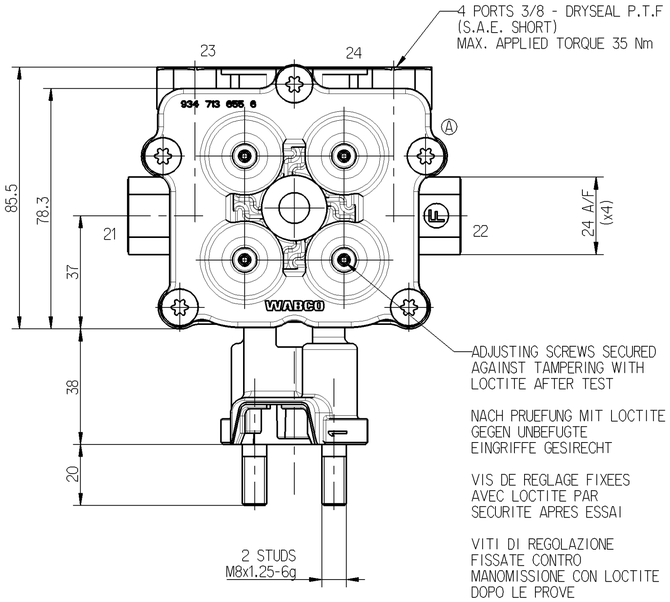

PORTS ORIFICES ANSHLUESSE ATTACCHI		21	22	23	24
OPENING PRESSURE DYNAMIC OEFFNUNGSDRUCK DYNAMISCH PRESSION DE OUVERTURE DYNAM PRESSIONE DI APERTURA DINAM	BAR	6.0 $^{+0}_{-0.3}$	6.0 $^{+0}_{-0.3}$	7.0 $^{+0}_{-0.3}$	6.0 $^{+0}_{-0.3}$
CLOSING PRESSURE DYNAMIC SCHLIESSDRUCK DYNAMISCH PRESSION DE FERMETURE DYNAM PRESSIONE DI CHIUSURA DINAM	BAR	≥ 5.5			
CLOSING PRESSURE STATIC AT FAILURE OF CIRCUIT.... SCHLIESSDRUCK STATISCH BEI AUSFALLVON KREIS... PRESSION DE FERMETURE STATIQUE EN CAS DE DEFAILLANCE DU CIRCUIT.... PRESSIONE DI CHIUSURA STATICA IN CASO DI DIFETTO DEL CIRCUITO...	BAR	0	≥ 4.5	#	≥ 4.5
		≥ 4.5	0	≥ 4.5	≥ 4.5
		≥ 4.5	≥ 4.5	0	≥ 4.5
		≥ 4.5	≥ 4.5	≥ 4.5	0

LABEL MARKED WITH:-
2. PRODUCTION PLANT
3. DATE OF MANUFACTURE
4. BLANK
5. REVISION LEVEL
6. PART NUMBER

SCHILD MIT AUFSCHRIFT:-
2. FERTIGUNGSWERK
3. HERSTELLDATUM
4. LEERSTELLE
5. ANDERUNGSSTAND
6. TEILE NR.

ETIQUETTE COMPORTANT:-
2. USINE DE PRODUCTION
3. DATE DE FABRICATION
4. VIDE
5. NIVEAU DE REVISION
6. NO. DE PIECE

ETICHETTA CONTRASSEGNATA CON:-
2. STABILIMENTO DI PRODUZIONE
3. DATA DI FABRICAZIONE
4. SPAZIO VUOTO
5. LIVELLO DI REVISIONE
6. PARTICOLARE NO.

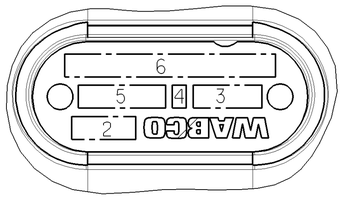

DETAIL A
3:1

ADMISSIBLE TEMPERATURES = -40°C / +90°C
THERMISCHER ANWENDUNGSBEREICH
TEMPERATURE DE SERVICE
TEMPERATURA D'ESERCIZIO

SERVICE PRESSURE = 13 bar MAX.
BETRIEBSDRUCK
PRESSION DE SERVICE
PRESSIONE D'ESERCIZIO

MEDIUM : ARIA
MEDIUM : AIR
FLUIDE : LUFT
FLUIDO : ARIA

General Specification: JED-334-0					
Further Technical Data:					
Doc. Code:		Sheet:		To	
General Tolerances JED-261					
Class 1)	Range of Nominal Dimensions (± mm) ≤ 50	> 50 ≤ 180	> 180 ≤ 400	> 400	∢
Fine	0.5	1.0	1.5	2.0	±3°
Medium X	1.0	2.0	3.0	4.0	
Coarse	2.0	3.5	5.0	6.5	
Tapped Holes acc.					
1) Tolerance Class Applied Crossmarked					

Copyright WABCO®

	Date	Signature
Drawn	2009-04-24	Chamot
Checked	2009-06-08	Mach
Expert	MACH	

WABCO

QUAD CIRCUIT PROTECTION VALVE
VIERKRIES - SCHUTZVENTIL
VALVE DE PROTECTION LA 4 CIRCUITS
VALVOLA DI PROTEZIONE LA 4 CIRCUITI

Mass	Scale	Material No.	Date of first issue: 2006-05-31		
1.3 KG	1:1	934 714 152 0	Doc.Code 005	Language ML	Sheet 1/1
Size A 1	CAD System Pro/E	ECN-No. 121685	Revision 3 A	Techn. Resp. 5120	Replacement for

100mm

Toute Communication ou reproduction de ce document, toute exploitation ou communication de son contenu sont interdites, sauf autorisation expresse. Tout manquement à cette règle constitue un délit, expose à des dommages et intérêts et expose son auteur au versement de dommages et intérêts. Tous droits réservés, en particulier en cas de dépôt de brevet.

Weitergabe sowie Vervielfältigung dieser Unterlage, Verwertung und Mitteilung ihres Inhalts nicht gestattet, soweit nicht ausdrücklich zugestanden. Zuwiderhandlungen verpflichten zum Schadenersatz. Alle Rechte für den Fall der Patenterteilung oder eingetragenen Gebrauchsmuster vorbehalten.

Non è permesso consegnare o fare o riprodurre questo documento, né utilizzare il contenuto o renderlo comunque noto a terzi senza autorizzazione esplicita. Ogni violazione costituisce un illecito e comporta il risarcimento di danni. Tutti i diritti sono riservati, in particolare in caso di rilascio di brevetto o di registrazione di un modello di utilità.

Copying of this document and giving it to others and the use or communication of the contents thereof, are forbidden without express authority. Contravention of this restriction will constitute an evident delict and result in a liability to the payment of damages. All rights are reserved in the event of the grant of a patent or registration of a utility model or design. The owner is the addressee.

dwg. 934714152O..... /005 / Version 3 A 2009 Approved / rev. 934714152O.....J02