FLOW RATE = 16-35 l/min
AT P23 = 8, P21 = 0 bar
WHEN P21 DROPS TO ZERO
RETAINED P23 = 1bar MAX

DURCHFLUSSMENGE = 16-35 l/min
BEI P23 = 8, P21 = 0 bar
WENN P21 AUF NULL ABFAELLT
GESICHERTER DRUCK P23 = 1bar MAX

DEBIT= 16-35 l/min
SCUS P23 = 8, P21 = 0 bar
SI P21 TOMBE A ZERO
LA PRESSION MAINTENUE A P23 = 1bar MAX

PORTATA = 16-35 l/min
PER P23 = 8, P21 = 0 bar
SE P21 CALC A ZERO
LA PRESSIONE MANTENUTA A P23 = 1bar MAX

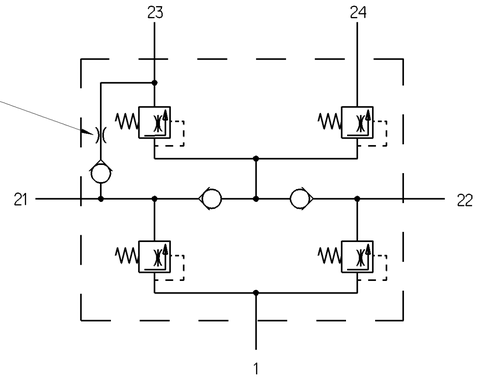

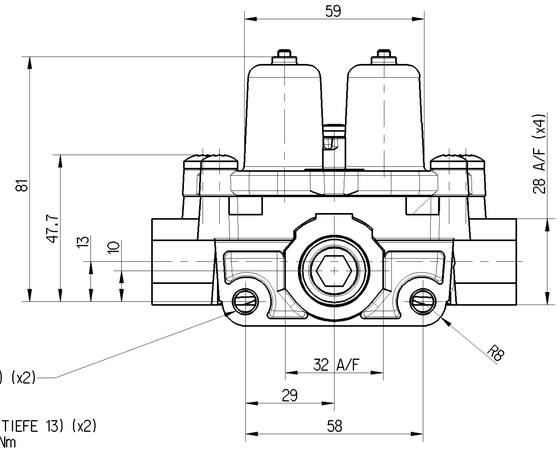

M8x1.25 THRO'(13 DEEP) (x2)
TORQUE 25-30 Nm

M8x1.25 DURCHGEHEND (TIEFE 13) (x2)
ANZUGSMOMENT 25-30 Nm

M8x1.25 FILET (PROFONDEUR 13) (x2)
COUPLE DE SERRAGE 25-30 Nm

M8x1.25 ATTRAVERSO (PROFONDITA 13) (x2)
COPPIA DI SERRAGGIO 25-30 Nm

SCALE
MASSSTAB
ECHELLE 1:2
SCALA

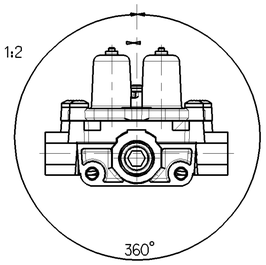

Ⓓ CORROSION PROTECTION
ALUMINIUM PARTS CHROMATED
TO JED-259
SCREWS MECHANICALY ZINC
PLATED TO JED-256-4

KORROSIONSSCHUTZ
ALUMINIUMTEILE CHROMATIERT
GEMASS JED-259
SCHRAUBEN MECHANISCH VERZINKT
GEMAESS JED-256-4

PROTECTION ANTICORROSIVE
PIECES ALUMINIUM CHROMEES
POUR JED-259
VIS MECANIQUEMENT ZINGUEES
POUR JED-256-4

PROTEZIONE ANTICORROSIONE
PEZZI IN ALUMINIO CROMATI
PER JED-259
VITI MECCANICAMENTE ZINCATE E
PER JED-256-4

CONNECTIONS ANSCHLUESSE ORIFICES ORIFIZI		SUPPLY LUFTEINTRITT ALIMENTATION ALIMENTAZIONE
	1-	
21-	CIRCUIT 1 KREIS 1 CIRCUIT 1 CIRCUITO 1	22- CIRCUIT 2 KREIS 2 CIRCUIT 2 CIRCUITO 2
23-	CIRCUIT 3 KREIS 3 CIRCUIT 3 CIRCUITO 3	24- CIRCUIT 4 KREIS 4 CIRCUIT 4 CIRCUITO 4

VALVE MAY BE MOUNTED AT ANY ANGLE
VENTIL KANN IN BELIEBIGER LAGE MONTIERT WERDEN
LA SOUPAPE PEUT ETRE INSTALLE A N'IMPORTE QUEL ANGLE
VALVOLA MONTABBILE A QUALSIASI ANGOLO

* OPENING PRESSURE 23 TO EXCEED HIGHEST ACTUAL OPENING PRESSURE OF OTHER CIRCUITS BY >=0.1 BAR. REFER TO DOC. CODE 435
* DER OEFFNUNGSDRUCK DES KREISES 23 MUSS IMMER UM >=0.1 BAR UEBER DEM HOECHSTEN 1ST-OEFFNUNGSDRUCK DER ANDEREN KREISE LIEGEN. SIEHE DOC. 435
* LA PRESSION D'OUVERTURE DU CIRCUIT 23 DOIT TOUJOURS EXCEDER LA PLUS HAUT PRESSION D'OUVERTURE DES AUTRES CIRCUITS DE >=0.1 BAR. VOIR DOC. 435
* LA PRESSIONE DI APERTURA DEL CIRCUITO 23 DEVE SEMPRE SUPERARE LA PIU ALTA PRESSIONE DI APERTURA DEGLI ALTRI CIRCUITII. VEDERE DOC. 435

PORTS ORIFICES	ANSCHLUESSE ATTACCHI	21	22	23	24
OPENING PRESSURE DYNAMIC OEFFNUNGSDRUCK DYNAMISCH PRESSION DE OUVERTURE DYNAM PRESSIONE DI APERTURA DINAM	BAR	6.9 +0 -0.3	6.9 +0 -0.3	7.0 +0 -0.3 *	6.9 +0 -0.3
CLOSING PRESSURE DYNAMIC SCHLIESSDRUCK DYNAMISCH PRESSION DE FERMETURE DYNAM PRESSIONE DI CHIUSURA DINAM	BAR	≥ 5.0			
CLOSING PRESSURE STATIC AT FAILURE OF CIRCUIT.... SCHLIESSDRUCK STATISCH BEI AUSFALLVON KREIS... PRESSION DE FERMETURE STATIQUE EN CAS DE DEFAILLANCE DU CIRCUIT.... PRESSIONE DI CHIUSURA STATICA IN CASO DI DIFETTO DEL CIRCUITO...	BAR	0	≥ 4.5	#	≥ 4.5
		≥ 4.5	0	≥ 4.5	≥ 4.5
		≥ 4.5	≥ 4.5	0	≥ 4.5
		≥ 4.5	≥ 4.5	≥ 4.5	0

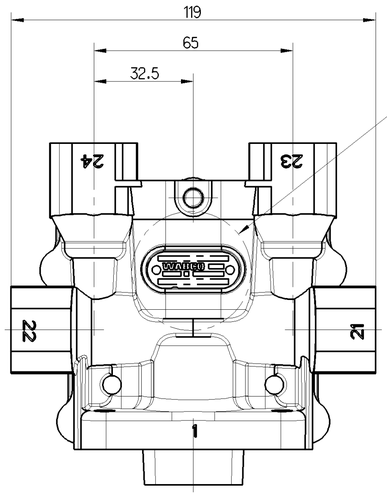

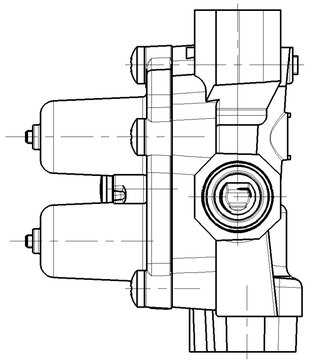

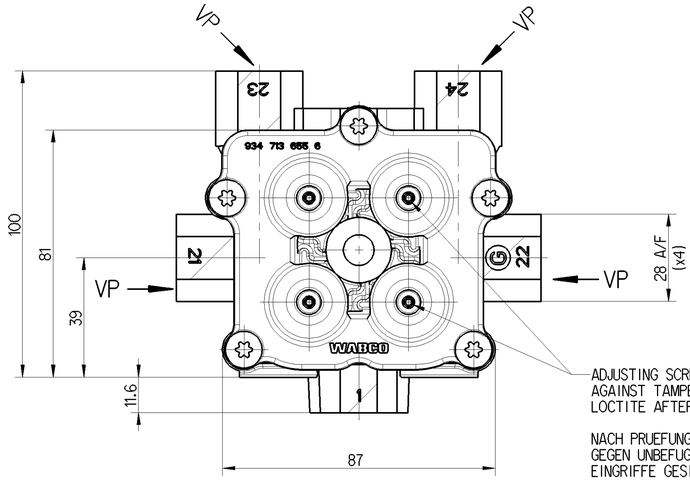

ADJUSTING SCREWS SECURED
AGAINST TAMPERING WITH
LOCTITE AFTER TEST

NACH PRUEFUNG MIT LOCTITE
GEGEN UNBEFUGTE
EINGRIFFE GESICHERT

VIS DE REGLAGE FIXEES
AVEC LOCTITE PAR
SECURITE APRES ESSAI

VITI DI REGOLAZIONE
FISSATE CONTRO
MANOMISSIONE CON LOCTITE
DOPO LE PROVE

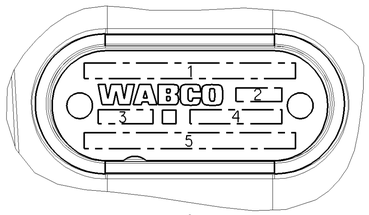

A
3:1

LABEL MARKED WITH:-
1. CUSTOMER NUMBER
2. PRODUCTION PLANT
3. DATE OF MANUFACTURE
4. OPTIONAL
5. WABCO IDENTIFICATION NUMBER

SCHILD MIT AUFSCHRIFT:-
1. KUNDEN-NR.
2. FERTIGUNGSWERK
3. HERSTELLDATUM
4. BELIEBIG
5. WABCO IDENTIFIKATIONS-NUMMER

ETIQUETTE COMPORTANT:-
1. NO CLIENT
2. USINE DE PRODUCTION
3. DATE DE FABRICATION
4. A VOLONTE
5. WABCO NUMERO D'IDENTIFICATION

ETICHETTA CONTRASSEGNATA CON:-
1. NO CLIENTE
2. STABILIMENTO DI PRODUZIONE
3. DATA DI FABRICAZIONE
4. A SCELTA
5. WABCO NUMERO D'IDENTIFICAZIONE

ADMISSIBLE TEMPERATURES = -40°C / +90°C
THERMISCHER ANWENDUNGSBEREICH
TEMPERATURE DE SERVICE
TEMPERATURA D'ESERCIZIO

SERVICE PRESSURE = 13 bar MAX.
BETRIEBSDRUCK
PRESSION DE SERVICE
PRESSIONE D'ESERCIZIO

MEDIUM: AIR
MEDIUM: LUFT
MILIEU: AIR
FLUIDO: ARIA

VP =

JED-388-O-M22x1.5 VOSS SYSTEM 230,
TORQUE 35 Nm MAX.

JED-388-O-M22x1.5 VOSS SYSTEM 230,
ANZUGSMOMENT 35 Nm MAX.

JED-388-O-M22x1.5 VOSS SYSTEM 230,
COUPLE DE SERRAGE 35 Nm MAX.

JED-388-O-M22x1.5 VOSS SYSTEM 230,
COPPIA DI SERRAGIO 35 Nm MAX.

Ⓓ

General Specification: JED-334-0					
Further Technical Data:					
Doc. Code:		Sheet:	To		
General Tolerances JED-261					
Range of Nominal Dimensions (± mm)					
Class 1)	≤ 50	> 50 ≤ 180	> 180 ≤ 400	> 400	∢
Fine	0.5	1.0	1.5	2.0	
Medium X	1.0	2.0	3.0	4.0	±3°
Coarse	2.0	3.5	5.0	6.5	
Tapped Holes acc. JED-152					
1) Tolerance Class Applied Crossmarked					

Copyright WABCO®

Date	Signature
Drawn 2015-11-10	Obuszynski
Checked 2015-11-13	Chamol
Expert	Kopciuch

WABCO

QUAD CIRCUIT PROTECTION VALVE
VIERKREIS - SCHUTZVENTIL
VALVE DE PROTECTION LA 4 CIRCUITS
VALVOLA DI PROTEZIONE LA 4 CIRCUITI

Mass	Scale	Material No.	Date of first issue: 2006-08-01		
1.2 KG	1:1	934 714 400 0	Doc.Code 005	Language ML	Sheet 1/1
Size A 1	CAD System Pro/E	ECN-No. 169159 / Revision 2 x D / Techn. Resp. 5120	Replacement for		

100mm

Tutte Comunicazioni o riproduzione di questo documento, tutte esploitazione o comunicazione di suo contenu sont interdites, sauf autorisation écrite. Tous droits de propriété industrielle réservés, notamment en matière de dépôts d'brevets et de modèles.
Non è permesso consegnare o fare o riprodurre questo documento, né utilizzare il contenuto o renderlo comunque noto a terzi senza esplicita autorizzazione. Ci si riserva ogni diritto di proprietà industriale, anche per quanto attiene ad eventuali brevetti o modelli.
Weitergabe sowie Vervielfältigung dieser Unterlage, Verwertung und Mitteilung ihres Inhalts nicht gestattet, soweit nicht ausdrücklich zugestanden. Zuwiderhandlungen verpflichten zu Schadenersatz. Alle Rechte für den Fall der Patent- oder Gebrauchsmustereintragung vorbehalten.
Copying of this document and giving it to others and the use or communication of the contents thereof, are forbidden without express authority. Offenders are liable to the payment of damages. All rights are reserved in the event of the grant of patent or registration of a utility model or design. This document is the subject of copyright.