<1>	SAFETY CHARACTERISTICS	0
<2>	SIGNIFICANT CHARACTERISTICS	0

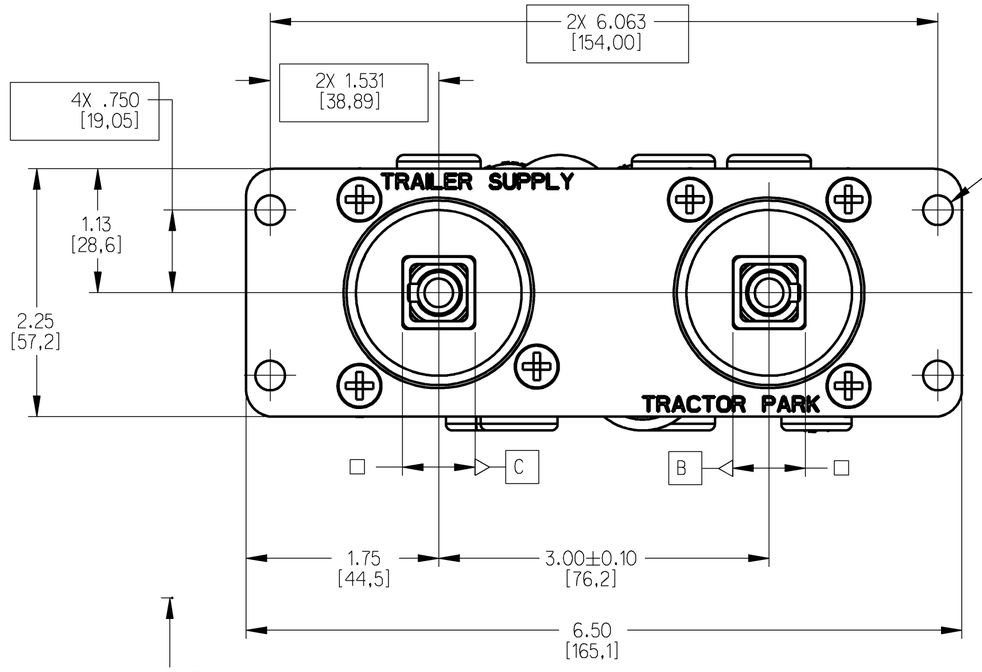

4X Ø .265 -.275 THRU
[6,74 -6,98]

⌖	Ø.030[0.76]Ⓜ	A	B-C	B

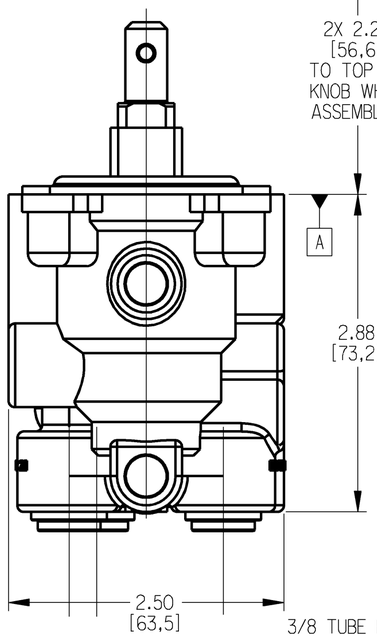

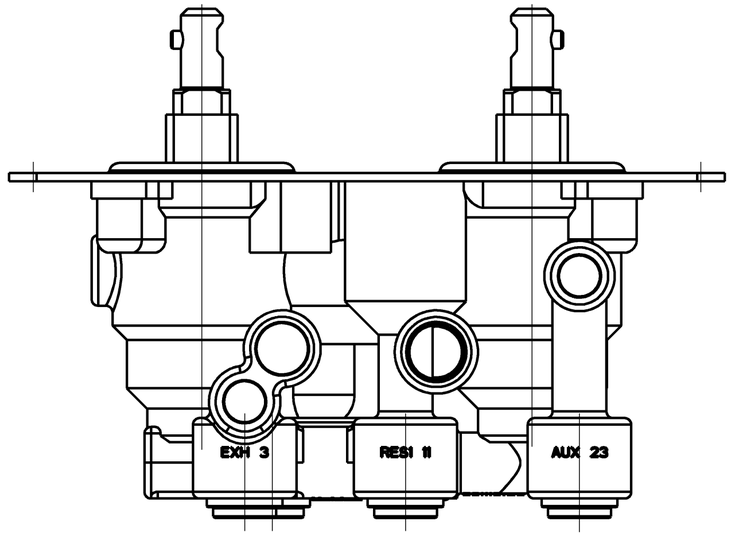

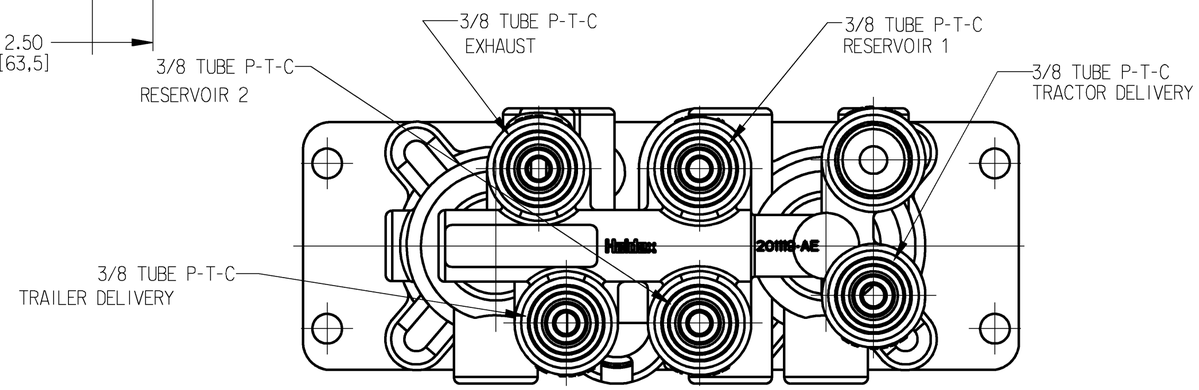

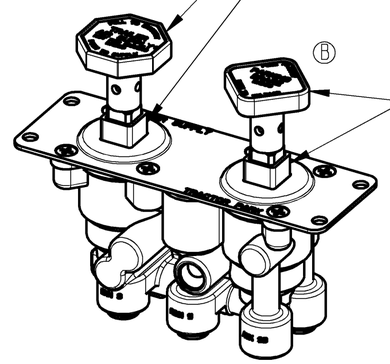

KNOB AND BUSHING
RED IN COLOR, KNOB
MUST READ AS SHOWN.
KNOB SHIPPED UNASSEMBLED

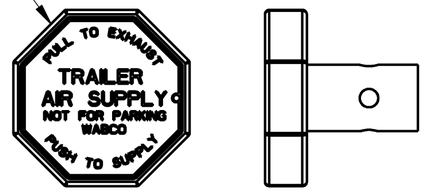

KNOB AND BUSHING
YELLOW IN COLOR, KNOB
MUST READ AS SHOWN.
KNOB SHIPPED UNASSEMBLED

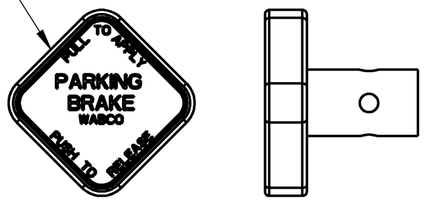

SCALE 0.5

Ⓑ NOTES:

KNOBS TO BE PACKAGED IN SEPARATE COMPARTMENT
IN THE SAME BAG WITH VALVE

AUTOMATIC POP OUT OF PARKING BRAKE 20-35 PSI

AUTOMATIC POP OUT OF TRAILER BRAKE 20-45 PSI

DIMENSIONS ARE FOR REFERENCE ONLY UNLESS OTHERWISE SPECIFIED

DIMENSIONS IN [ ] ARE METRIC

NON-OVERRIDE SETTING 25±5 PSI

TEMPERATURE RANGE -40°F [-40°C] TO 200°TO 200°F [93.3°C]

MAXIMUM OPERATING PRESSURE SHALL BE 150 PSI

LEAKAGE TO COMPLY WITH SAE J1410, 5.2

PARTS TO BE IDENTIFIED WITH WABCO NAME, PART NUMBER,
DATE OF MANUFACTURE AND COUNTRY OF ORIGIN

DATUMS B & C ARE BASED ON SQUARE CLEARANCE HOLES IN THE COVER PLATE

THIRD ANGLE PROJECTION

General Specification: JED-334-1 , Size ISO 14405 LP					
Further Technical Data:					
Doc. Code:		Sheet:	To		
General Tolerances JED-261					
Class 1)	Range of Nominal Dimensions (± mm) ≤ 50	> 50 ≤ 180	> 180 ≤ 400	> 400	∢
Fine	0.5	1.0	1.5	2.0	±3°
Medium	1.0	2.0	3.0	4.0	
Coarse	2.0	3.5	5.0	6.5	
Tapped Holes acc. ISO 4039 / JED-152					
1) Tolerance Class Applied Crossmarked					

Copyright WABCO®

Date	Signature
Drawn 2019-05-07	Srinivasaperumal
Checked 2019-05-07	Paoletti
Expert -	

WABCO Ⓑ

VALVE, MANIFOLD DASH

Mass	Scale	Material No.	Date of first issue: -		
- KG	1:1	936 649 034 0	Doc.Code 605	Language EN	Sheet 1/1
Size A 2	CAD System CREO	ECN-No. 500799	Revision 3x B	Techn. Resp. 5210_MW	Replacement for -

100mm

Non è permesso consegnare a terzi o riprodurre questo documento, né utilizzarne il contenuto o renderlo comunque noto a terzi senza autorizzazione esplicita. Ogni infrazione costituirà un evidente abuso e comporterà il risarcimento dei danni subiti. E' fatta riserva di tutti i diritti derivanti da brevetti o modelli.

Copying of this document and giving it to others and the use or communication of the contents thereof, are forbidden without express authority. Contravention of this restriction will constitute an evident abuse and result in a liability to the payment of damages. All rights are reserved in the event of the grant of patent or registration of a utility model or design. This document is the subject of copyright.

Toute Communication ou reproduction de ce document, toute exploitation ou communication de son contenu sont interdites, sauf autorisation expresse. Tout manquement à cette règle constitue un abus évident et expose son auteur au versement de dommages et intérêts. Tous droits de propriété industrielle réservés, notamment en matière de brevets et de modèles.

Weitergabe sowie Vervielfältigung dieser Unterlage, Verwertung und Mitteilung ihres Inhalts nicht gestattet, soweit nicht ausdrücklich zugesichert. Zuwiderhandlungen stellen einen offensichtlichen Mißbrauch dar und verpflichten zu Schadenersatz. Alle Rechte für den Fall der Patenterteilung oder Gebrauchsmuster-Eintragung vorbehalten.